R15

Code No: 124DQ

JAWAHARLAL NEHRU TECHNOLOGICAL UNIVERSITY HYDERABAD

B.Tech II Year II Semester Examinations, May - 2017

STRUCTURAL ANALYSIS – I

(Common to CE, CEE)

Time: 3 Hours **Max. Marks: 75**

Note: This question paper contains two parts A and B.
Part A is compulsory which carries 25 marks. Answer all questions in Part A.
Part B consists of 5 Units. Answer any one full question from each unit.
Each question carries 10 marks and may have a, b, c as sub questions.

PART- A

(25 Marks)

1.a) Explain what you understand by perfect frame, deficient frame and redundant frame. [2]

b) Give the relation between number of joints (j) and number of members (m) in a perfect frame in plane and for space structures. [3]

c) Write down few advantages and disadvantages of arches over beams. [2]

d) Distinguish between a true arch and a corbelled arch. [3]

e) Write the fixed end moments in a fixed beam, with left support rotated by θ_A in anti clock wise direction. Explain each term mentioned in fixed end moments with sketch. [2]

f) Explain different types of props with sketches. [3]

g) Write down the slope deflection equation for a beam element and also explain this method is preferable. [2]

h) In a member AB, if a moment of 10 kN-m is applied at A, what is the moment carried over to the fixed end B? [3]

i) Define terms: absolute maximum bending moment and shear force. [2]

j) Draw the ILD for shear force and bending moment at any section of a simply supported beam. [3]

PART-B

(50 Marks)

2. Determine the forces in the members of the Truss shown in Figure 1. [10]

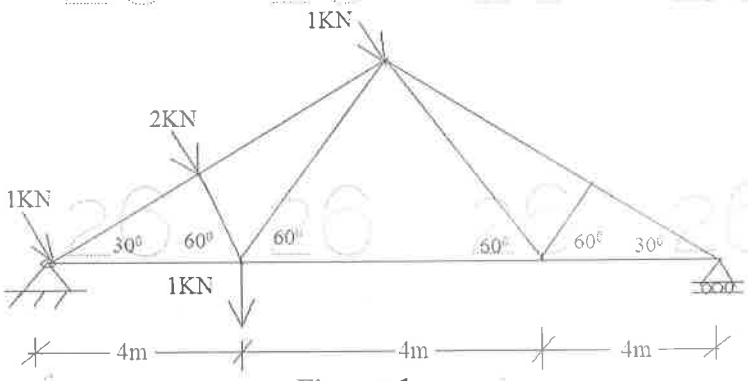

Figure: 1

OR

3. Determine the forces in the members 1(horizontal), 2(vertical) and 3(inclined) of the truss shown in Figure 2 by method of sections. [10]

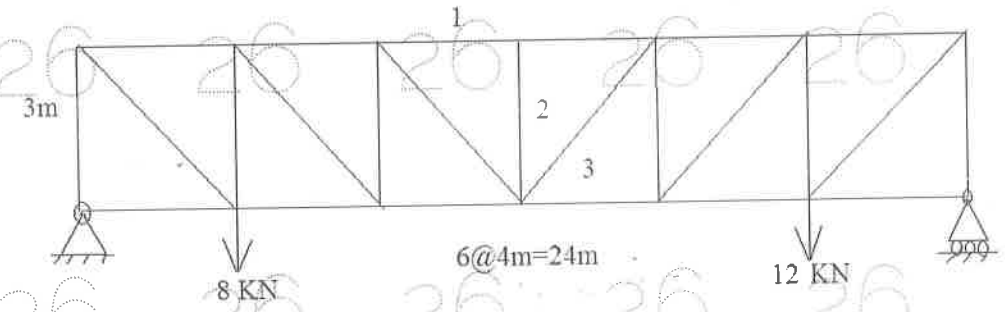

Figure: 2

4. Find the horizontal movement of the roller end of the portal frame shown in Figure 3. Take $E=2\times10^5$ N/mm^2 and $I=3\times10^4$mm^4. [10]

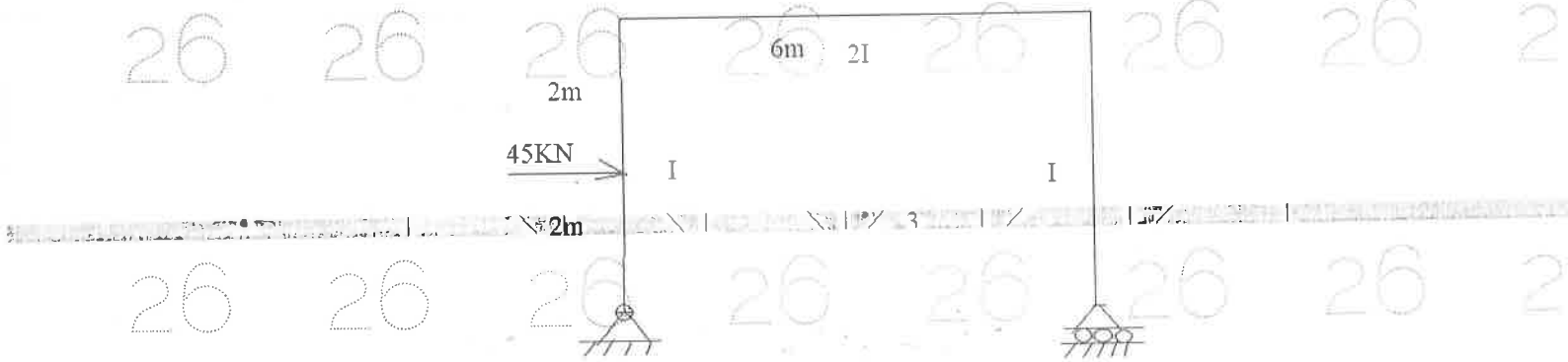

Figure: 3

OR

5. A three hinged parabolic arch of span 'L' has its abutments A and B at depths h_1 and h_2 below the crown C. The arch carries a concentrated load W at the crown. Determine the horizontal thrust, vertical reactions. Draw BMD. [10]

6. Analyse the propped cantilever shown in Figure 4. During loading the fixed end support is rotated 0.002radians in anti-clockwise direction. Draw BMD. [10]

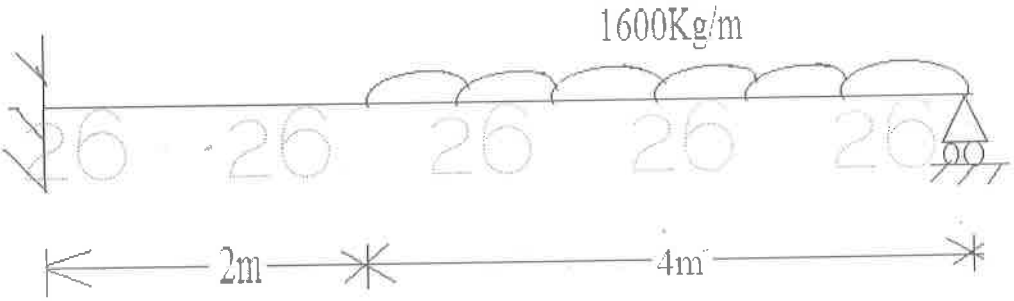

Figure: 4

OR

7. Determine the fixed end moments, reactions and, Draw BMD for the fixed beam shown in Figure 5. [10]

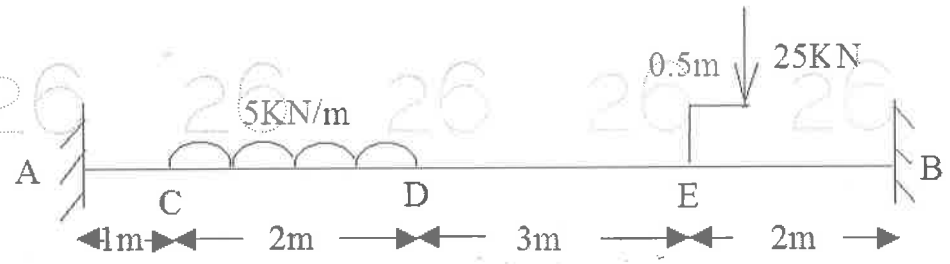

Figure: 5

8. Analyse the portal frame loaded as shown in the Figure 6 and Draw the BMD. The frame is fixed at 'A' and hinged at 'D'. Adopt Moment distribution Method. [10]

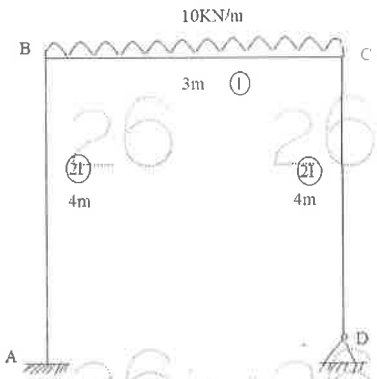

Figure: 6

OR

9. Analyse the portal frame ABCD as shown in Figure 7. The ends A and D are hinged. EI = constant for the entire frame. Draw the BMD. (Use Slope Deflection Method). [10]

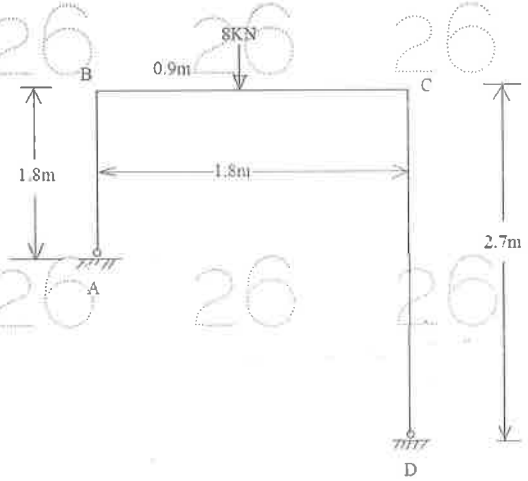

Figure: 7

10. For the beam shown in Figure 8. Draw the ILD for the following:
a) Reaction V_b at B
b) Reaction V_a at A
c) Shear force at D
d) Bending moment at D, find also maximum values of these quantities due to LL of 20 KN/m. [10]

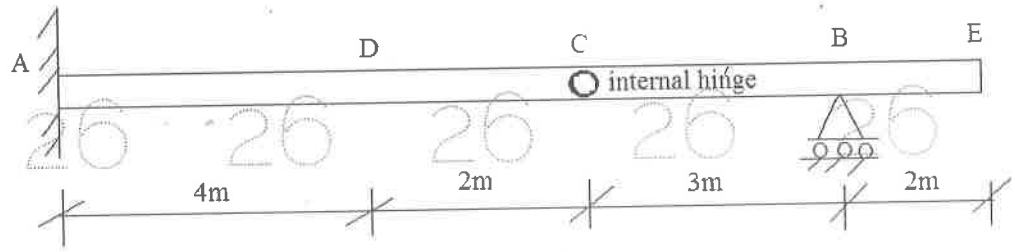

Figure: 8

OR

11. Draw ILD, for top and bottom chords of the warren type truss shown in Figure 9. [10]

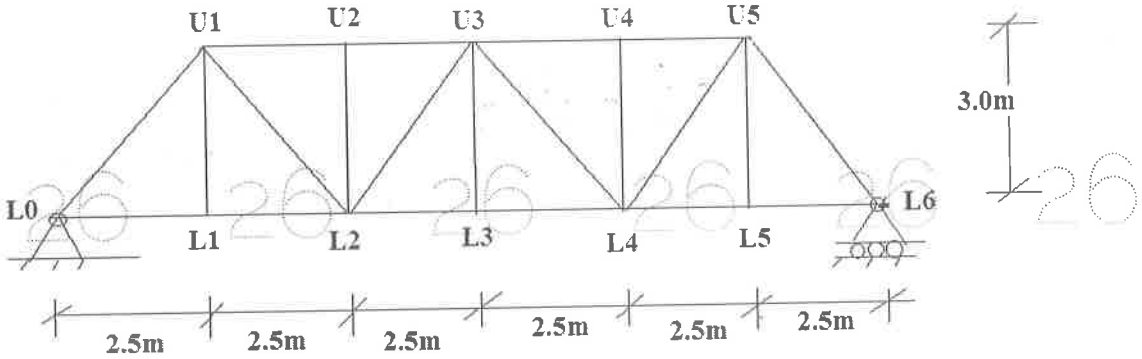

Figure: 9

---ooOoo---

Code No: 124AD

R15

JAWAHARLAL NEHRU TECHNOLOGICAL UNIVERSITY HYDERABAD
B.Tech II Year II Semester Examinations, May - 2017
POWER SYSTEMS-I
(Electrical and Electronics Engineering)

Time: 3 Hours **Max. Marks: 75**

Note: This question paper contains two parts A and B.
Part A is compulsory which carries 25 marks. Answer all questions in Part A.
Part B consists of 5 Units. Answer any one full question from each unit.
Each question carries 10 marks and may have a, b, c as sub questions.

PART- A

(25 Marks)

1.a) Why is the overall efficiency of a steam power station very low? Explain in detailed. [2]
b) What is the principle source of generation of electrical energy? [3]
c) What is the importance of minimum potential on the distributor? [2]
d) What is the controlling factor in determining the size of a distributor? [3]
e) Why do we use isolators on both sides of circuit brakers? [2]
f) What is the utility of instrument transformers in substations? [3]
g) Why is the power factor not more than unity? [2]
h) What are the causes of low power factor? [3]
i) What is the importance of interest on capital investment in calculating the cost of electrical energy? [2]
j) What is the significance of depreciation in the economics of power generation? [3]

PART-B

(50 Marks)

2.a) What are the functions of economizer and superheated in a thermal power plant?
b) What are the types of nuclear reaction? Discuss briefly. [5+5]

OR

3.a) What are the types of steam turbine? Briefly discuss about their use and characteristics.
b) What are the methods of producing nuclear reaction? What is chain reaction? [5+5]

4.a) i) Write the difference between d.c. and a.c. distribution.
ii) Write short notes on the following Current distribution in a 3-wire d.c. system.
b) A 3-phase, 4-wire system supplies power at 400V and lighting at 230 V. If the Lamps are used require 70, 85 and 44 amperes in each of the three lines, what should be the current in the neutral wire? If a 3-phase motor is now started, taking 220 A from the lines at a p.f. of 0.3 lagging, what should be the total current in each line and neutral wire? Find also the total power supplied to the lamps and the motor. [5+5]

OR

5.a) In a 500/250 V d.c. 3-wire system, there is a current of 1200 A on the positive side and 1000 A on the negative side and a motor load of 200kW across the outers. The loss in each balancer machine is 5kW. Calculate load on each balancer machine.

b) Draw the phasor diagrams of A.C. distributor with concentrated loads for power factors with respect to respective load points. [5+5]

6.a) What is group switching? Explain its operation in detail with help of suitable diagram.

b) Draw the schematic line diagram of a typical 11kV/400V indoor substation showing all equipment. [5+5]

OR

7.a) Explain GIS with a single line diagram.

b) Give the compression between Air insulated substation and Gas insulated substation. [5+5]

8.a) Derive the expression for most economical power factor for constant kVA load.

b) Derive the expression for the capacity of phase modifier to improve power factor of a system. [5+5]

OR

9.a) Explain the working of on-load tap changing transformer for voltage control.

b) A 12500 kVA load is supplied at a power factor of 0.8 lagging by a 3-phase transmission line whose voltage is to be maintained at 33kV at both ends. Determine the capacity of the synchronous condenser to be installed at the receiving end. The impedance of the line is (3+j12) Ω per phase. [5+5]

10.a) Describe different types of tariff commonly used in practice.

b) Define and explain the importance of the following terms in generation:
i) connected load ii) demand factor iii) average load. [5+5]

OR

11.a) A consumer has the following connected loads: 15 lamps of 40W each and two heaters of 1,000W each. His maximum demand is 15000W. On the average he uses 10 lamps 5 hours a day and each heater for 3 hours a day. Find his average load, monthly energy consumption and load factor.

b) Explain how a load duration curve is plotted? What is its use? [5+5]

---ooOoo---

Code No: 124DA

R15

JAWAHARLAL NEHRU TECHNOLOGICAL UNIVERSITY HYDERABAD
B.Tech II Year II Semester Examinations, May - 2017
MACHINE DRAWING
(Common to ME, MCT, AME, MSNT)

Time: 3 Hours **Max. Marks: 75**

Answer any THREE questions from Part-A
Part-B is Compulsory

PART- A

[3 × 10 = 30 Marks]

1. Draw the sectional front view and top view of two 20 mm thick plates fastened together by means of 20 mm diameter stud, a hexagonal nut and a washer. Insert important dimensions. [10]

2. Draw the sectional front and side view of a cotter-joint with two sleeves and each sleeve is having a width of 32 mm and thickness 6 mm and the clearance is 3 mm and taper as 1 in 30. [10]

3. Draw neatly, a sectional front view and top view of a single riveted butt joint for two 10 mm thick plates, using two butt-straps. Show all the dimensions in your drawing. [10]

4. Draw the half sectional front view and side view of a journal bearing which can accommodate 40 mm diameter shaft. [10]

PART - B

[1 × 45 = 45 Marks]

5. Assemble the parts of spring loaded safety valve for the parts shown in Figure and draw the:
   a) sectional front view
   b) right side view. [45]

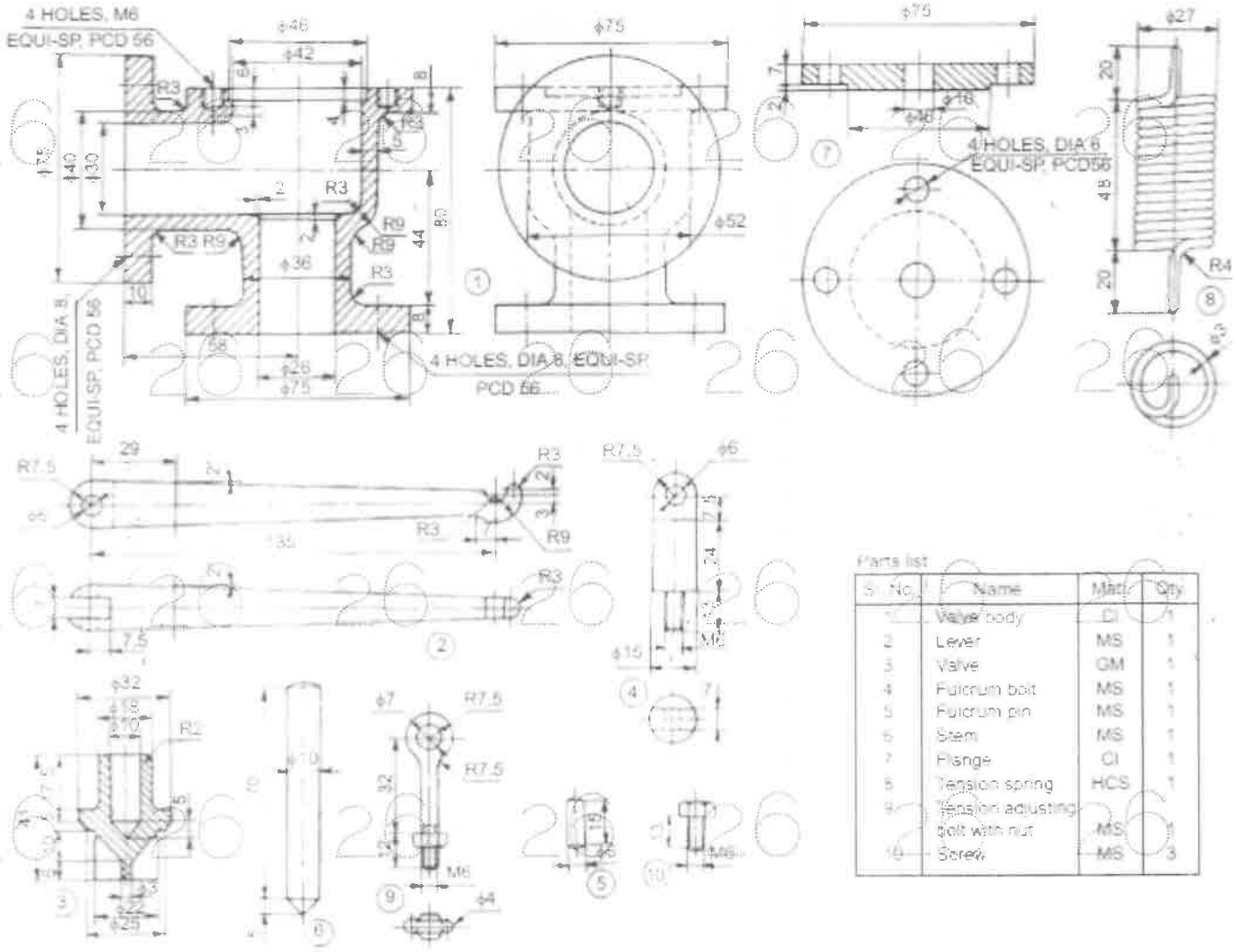

Parts list

Sr. No.	Name	Matl.	Qty.
1	Valve body	CI	1
2	Lever	MS	1
3	Valve	GM	1
4	Fulcrum bolt	MS	1
5	Fulcrum pin	MS	1
6	Stem	MS	1
7	Flange	CI	1
8	Tension spring	HCS	1
9	Tension adjusting bolt with nut	MS	1
10	Screw	MS	3

Code No: 124CX **R15**

JAWAHARLAL NEHRU TECHNOLOGICAL UNIVERSITY HYDERABAD
B.Tech II Year II Semester Examinations, May - 2017
JAVA PROGRAMMING
(Common to CSE, IT)

Time: 3 Hours **Max. Marks: 75**

Note: This question paper contains two parts A and B.
Part A is compulsory which carries 25 marks. Answer all questions in Part A.
Part B consists of 5 Units. Answer any one full question from each unit.
Each question carries 10 marks and may have a, b, c as sub questions.

PART - A **(25 Marks)**

1.a) What are the features of Java language? [2]
b) Explain the types of operators used in Java. [3]
c) What is static inner class? [2]
d) Explain implicit and explicit import statement. [3]
e) Explain the differences between process and thread. [2]
f) Explain how a multiple catch statement works. [3]
g) Explain the use of string tokenizer with an example. [2]
h) Explain any three methods defined by iterator. [3]
i) Explain the use of layout managers. [2]
j) Explain the life cycle of an applet. [3]

PART - B **(50 Marks)**

2.a) Describe the different types of data types used in Java.
b) Write a program to convert the temperature in Fahrenheit to centigrade. [5+5]

OR

3.a) Compare and contrast between the overloading and overriding methods with an example.
b) Write a java program to display the following output. [5+5]

```
1
1 2
1 2 3
1 2 3 4
1 2 3 4 5
```

4.a) Explain the importance of anonymous inner class with an example.
b) Write a program to find the sum of the given number. [5+5]

OR

5.a) What is java package? What is CLASSPATH? Explain how to create and access a java package with an example.
b) Create an interface with at least one method and implement that interface by within a method which returns a reference to your interface. [5+5]

6.a) Write a program for user defined exception that checks the internal and external marks if the internal marks are greater than 40 it raise the exception "internal marks are exceed", if the external marks are greater than 60 exception is raised and display the message the "external marks are exceed".

b) Explain the synchronization methods with an example. [5+5]

OR

7.a) Write a program to implement a producer and consumer problem by using multithreading.

b) Explain the java built in exceptions. [5+5]

8.a) Write a program to compute an average of the values in a file.

b) Explain the methods defined by Math. [5+5]

OR

9.a) Explain the different types of drivers used in JDBC.

b) Write a program to store the names of bank depositors and their current balances by using hash table. [5+5]

10.a) Write a java program to design a scientific calculator using AWT.

b) What are the different types of Event listeners supported by java? [5+5]

OR

11.a) Write a program using an applet which will print "key pressed" on the status Window when you press the key, "key released" on status window when you release the key and when you type the characters it should print "hello" at co-ordinates (50,50) on Applet.

b) Explain the various components in Swing. [5+5]

--ooOoo--

Code No: 114DQ

R13

JAWAHARLAL NEHRU TECHNOLOGICAL UNIVERSITY HYDERABAD

B.Tech II Year II Semester Examinations, May - 2017

STRUCTURAL ANALYSIS – I

(Common to CE, CEE)

Time: 3 Hours **Max. Marks: 75**

Note: This question paper contains two parts A and B.
Part A is compulsory which carries 25 marks. Answer all questions in Part A.
Part B consists of 5 Units. Answer any one full question from each unit.
Each question carries 10 marks and may have a, b, c as sub questions.

PART- A

(25 Marks)

1.a) Explain what you understand by perfect frame, deficient frame and redundant frame. [2]

b) Give the relation between number of joints (j) and number of members (m) in a perfect frame in plane and for space structures. [3]

c) Write down few advantages and disadvantages of arches over beams. [2]

d) Distinguish between a true arch and a corbelled arch. [3]

e) Write the fixed end moments in a fixed beam, with left support rotated by θ_A in anti clock wise direction. Explain each term mentioned in fixed end moments with sketch. [2]

f) Explain different types of props with sketches. [3]

g) Write down the slope deflection equation for a beam element and also explain this method is preferable. [2]

h) In a member AB, if a moment of 10 kN-m is applied at A, what is the moment carried over to the fixed end B? [3]

i) Define terms: absolute maximum bending moment and shear force. [2]

j) Draw the ILD for shear force and bending moment at any section of a simply supported beam. [3]

PART-B

(50 Marks)

2. Determine the forces in the members of the Truss shown in Figure 1. [10]

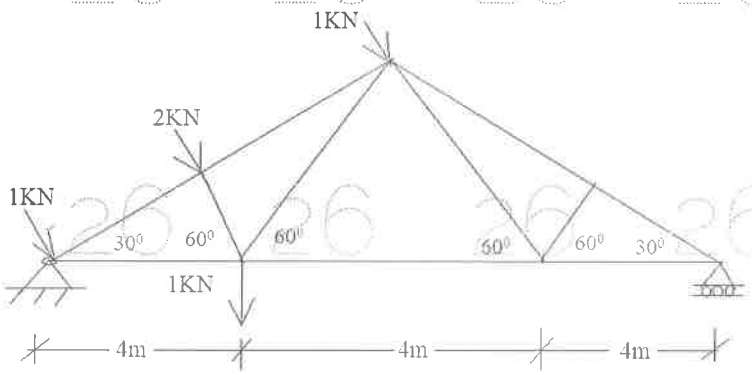

Figure: 1

OR

3. Determine the forces in the members 1(horizontal), 2(vertical) and 3(inclined) of the truss shown in Figure 2 by method of sections. [10]

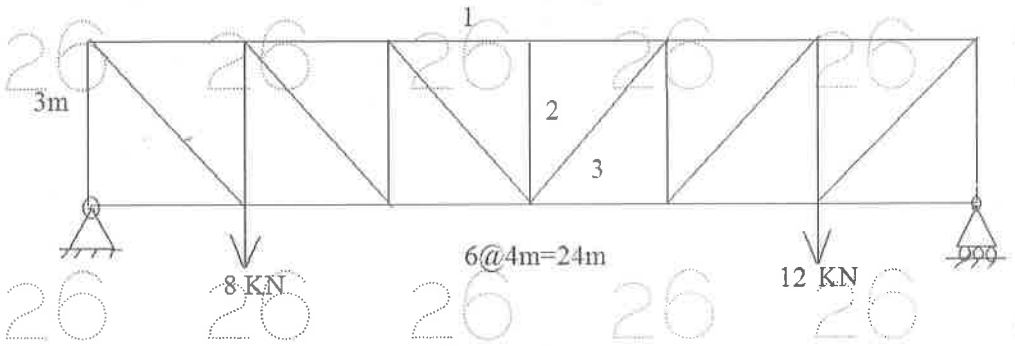

Figure: 2

4. Find the horizontal movement of the roller end of the portal frame shown in Figure 3. Take $E=2\times10^5$ N/mm^2 and $I=3\times10^4$mm^4. [10]

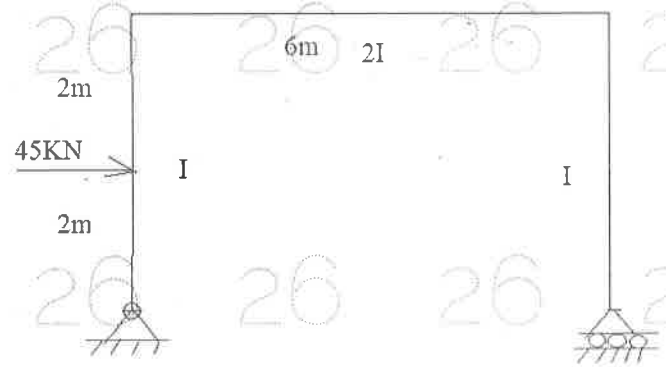

Figure: 3

OR

5. A three hinged parabolic arch of span 'L' has its abutments A and B at depths h_1 and h_2 below the crown C. The arch carries a concentrated load W at the crown. Determine the horizontal thrust, vertical reactions. Draw BMD. [10]

6. Analyse the propped cantilever shown in Figure 4. During loading the fixed end support is rotated 0.002radians in anti-clockwise direction. Draw BMD. [10]

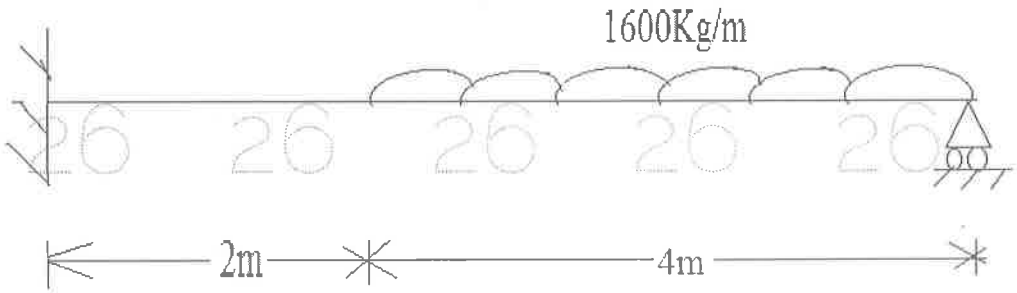

Figure: 4

OR

7. Determine the fixed end moments, reactions and, Draw BMD for the fixed beam shown in Figure 5. [10]

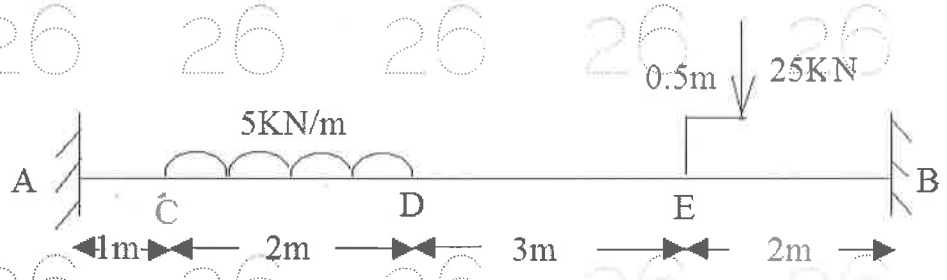

Figure: 5

8. Analyse the portal frame loaded as shown in the Figure 6 and Draw the BMD. The frame is fixed at 'A' and hinged at 'D'. Adopt Moment distribution Method. [10]

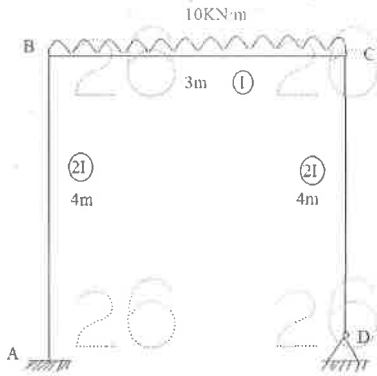

Figure: 6

OR

9. Analyse the portal frame ABCD as shown in Figure 7. The ends A and D are hinged. EI = constant for the entire frame. Draw the BMD. (Use Slope Deflection Method). [10]

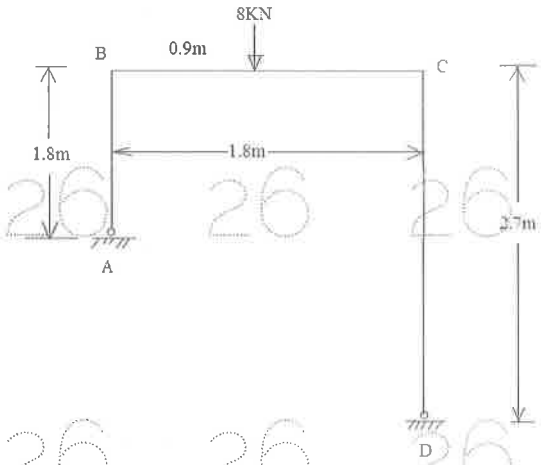

Figure: 7

10. For the beam shown in Figure 8. Draw the ILD for the following:
a) Reaction V_b at B
b) Reaction V_a at A
c) Shear force at D
d) Bending moment at D, find also maximum values of these quantities due to LL of 20 KN/m. [10]

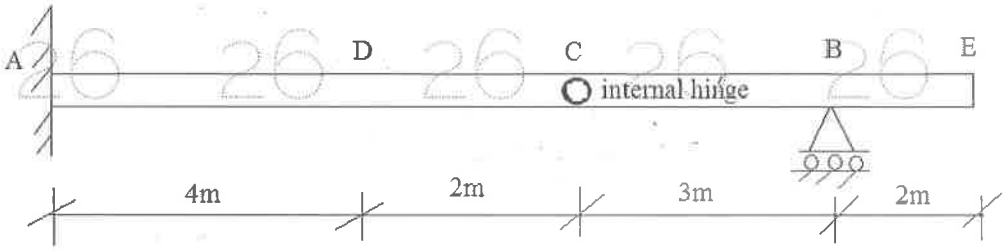

Figure: 8

OR

11. Draw ILD, for top and bottom chords of the warren type truss shown in Figure 9. [10]

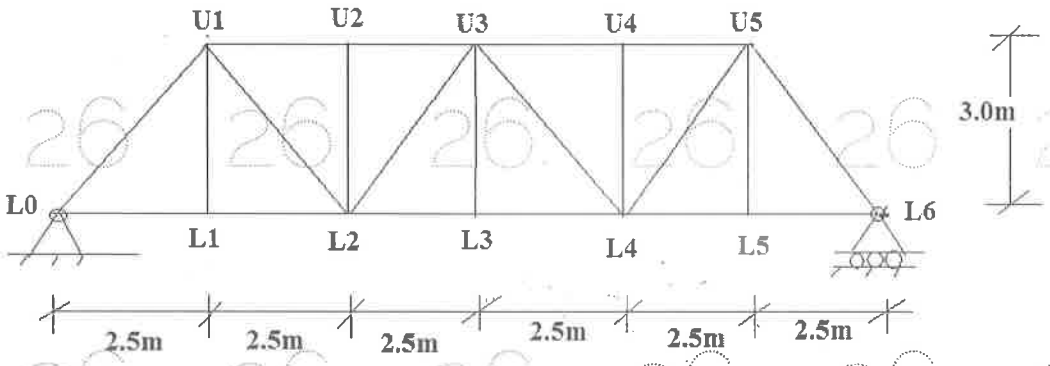

Figure: 9

---ooOoo---

R13

Code No: 114AD

JAWAHARLAL NEHRU TECHNOLOGICAL UNIVERSITY HYDERABAD

B.Tech II Year II Semester Examinations, May - 2017

POWER SYSTEMS-I

(Electrical and Electronics Engineering)

Time: 3 Hours **Max. Marks: 75**

Note: This question paper contains two parts A and B.
Part A is compulsory which carries 25 marks. Answer all questions in Part A.
Part B consists of 5 Units. Answer any one full question from each unit.
Each question carries 10 marks and may have a, b, c as sub questions.

PART- A

(25 Marks)

1.a) Why is the overall efficiency of a steam power station very low? Explain in detailed. [2]

b) What is the principle source of generation of electrical energy? [3]

c) What is the importance of minimum potential on the distributor? [2]

d) What is the controlling factor in determining the size of a distributor? [3]

e) Why do we use isolators on both sides of circuit brakers? [2]

f) What is the utility of instrument transformers in substations? [3]

g) Why is the power factor not more than unity? [2]

h) What are the causes of low power factor? [3]

i) What is the importance of interest on capital investment in calculating the cost of electrical energy? [2]

j) What is the significance of depreciation in the economics of power generation? [3]

PART-B

(50 Marks)

2.a) What are the functions of economizer and superheated in a thermal power plant?

b) What are the types of nuclear reaction? Discuss briefly. [5+5]

OR

3.a) What are the types of steam turbine? Briefly discuss about their use and characteristics.

b) What are the methods of producing nuclear reaction? What is chain reaction? [5+5]

4.a) i) Write the difference between d.c. and a.c. distribution.
ii) Write short notes on the following Current distribution in a 3-wire d.c. system.

b) A 3-phase, 4-wire system supplies power at 400V and lighting at 230 V. If the Lamps are used require 70, 85 and 44 amperes in each of the three lines, what should be the current in the neutral wire? If a 3-phase motor is now started, taking 220 A from the lines at a p.f. of 0.3 lagging, what should be the total current in each line and neutral wire? Find also the total power supplied to the lamps and the motor. [5+5]

OR

5.a) In a 500/250 V d.c. 3-wire system, there is a current of 1200 A on the positive side and 1000 A on the negative side and a motor load of 200kW across the outers. The loss in each balancer machine is 5kW. Calculate load on each balancer machine.

b) Draw the phasor diagrams of A.C. distributor with concentrated loads for power factors with respect to respective load points. [5+5]

6.a) What is group switching? Explain its operation in detail with help of suitable diagram.

b) Draw the schematic line diagram of a typical 11kV/400V indoor substation showing all equipment. [5+5]

OR

7.a) Explain GIS with a single line diagram.

b) Give the compression between Air insulated substation and Gas insulated substation. [5+5]

8.a) Derive the expression for most economical power factor for constant kVA load.

b) Derive the expression for the capacity of phase modifier to improve power factor of a system. [5+5]

OR

9.a) Explain the working of on-load tap changing transformer for voltage control.

b) A 12500 kVA load is supplied at a power factor of 0.8 lagging by a 3-phase transmission line whose voltage is to be maintained at 33kV at both ends. Determine the capacity of the synchronous condenser to be installed at the receiving end. The impedance of the line is (3+j12) Ω per phase. [5+5]

10.a) Describe different types of tariff commonly used in practice.

b) Define and explain the importance of the following terms in generation:
i) connected load ii) demand factor iii) average load. [5+5]

OR

11.a) A consumer has the following connected loads: 15 lamps of 40W each and two heaters of 1,000W each. His maximum demand is 15000W. On the average he uses 10 lamps 5 hours a day and each heater for 3 hours a day. Find his average load, monthly energy consumption and load factor.

b) Explain how a load duration curve is plotted? What is its use? [5+5]

---ooOoo---

Code No: 114DA

R13

JAWAHARLAL NEHRU TECHNOLOGICAL UNIVERSITY HYDERABAD
B.Tech II Year II Semester Examinations, May - 2017
MACHINE DRAWING
(Common to ME, AME, MSNT)

Time: 3 Hours **Max. Marks: 75**

Answer any THREE questions from Part-A
Part-B is Compulsory

PART- A

[3 × 10 = 30 Marks]

1. Draw the sectional front view and top view of two 20 mm thick plates fastened together by means of 20 mm diameter stud, a hexagonal nut and a washer. Insert important dimensions. [10]

2. Draw the sectional front and side view of a cotter-joint with two sleeves and each sleeve is having a width of 32 mm and thickness 6 mm and the clearance is 3 mm and taper as 1 in 30. [10]

3. Draw neatly, a sectional front view and top view of a single riveted butt joint for two 10 mm thick plates, using two butt-straps. Show all the dimensions in your drawing. [10]

4. Draw the half sectional front view and side view of a journal bearing which can accommodate 40 mm diameter shaft. [10]

PART - B

[1 × 45 = 45 Marks]

5. Assemble the parts of spring loaded safety valve for the parts shown in Figure and draw the:
a) sectional front view
b) right side view. [45]

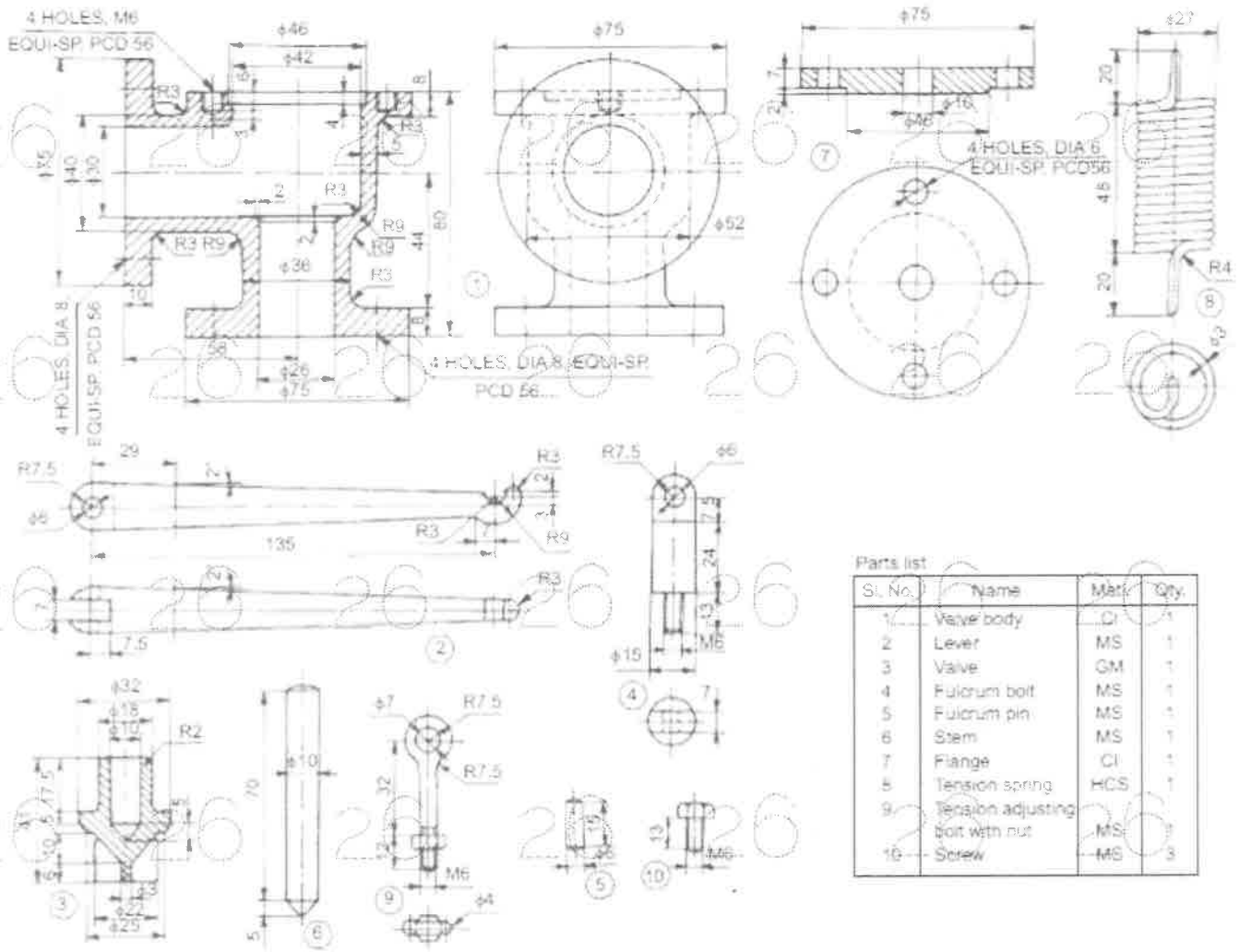

Parts list

Sl. No.	Name	Mat'l.	Qty.
1	Valve body	CI	1
2	Lever	MS	1
3	Valve	GM	1
4	Fulcrum bolt	MS	1
5	Fulcrum pin	MS	1
6	Stem	MS	1
7	Flange	CI	1
8	Tension spring	HCS	1
9	Tension adjusting bolt with nut	MS	1
10	Screw	MS	3

R13

Code No: 114CX

JAWAHARLAL NEHRU TECHNOLOGICAL UNIVERSITY HYDERABAD

B.Tech II Year II Semester Examinations, May - 2017

JAVA PROGRAMMING

(Common to CSE, IT)

Time: 3 Hours **Max. Marks: 75**

Note: This question paper contains two parts A and B.
Part A is compulsory which carries 25 marks. Answer all questions in Part A.
Part B consists of 5 Units. Answer any one full question from each unit.
Each question carries 10 marks and may have a, b, c as sub questions.

PART - A (25 Marks)

1.a) What are the features of Java language? [2]
b) Explain the types of operators used in Java. [3]
c) What is static inner class? [2]
d) Explain implicit and explicit import statement. [3]
e) Explain the differences between process and thread. [2]
f) Explain how a multiple catch statement works. [3]
g) Explain the use of string tokenizer with an example. [2]
h) Explain any three methods defined by iterator. [3]
i) Explain the use of layout managers. [2]
j) Explain the life cycle of an applet. [3]

PART - B (50 Marks)

2.a) Describe the different types of data types used in Java.
b) Write a program to convert the temperature in Fahrenheit to centigrade. [5+5]

OR

3.a) Compare and contrast between the overloading and overriding methods with an example.
b) Write a java program to display the following output. [5+5]

```
1
1 2
1 2 3
1 2 3 4
1 2 3 4 5
```

4.a) Explain the importance of anonymous inner class with an example.
b) Write a program to find the sum of the given number. [5+5]

OR

5.a) What is java package? What is CLASSPATH? Explain how to create and access a java package with an example.
b) Create an interface with at least one method and implement that interface by within a method which returns a reference to your interface. [5+5]

6.a) Write a program for user defined exception that checks the internal and external marks if the internal marks are greater than 40 it raise the exception "internal marks are exceed", if the external marks are greater than 60 exception is raised and display the message the "external marks are exceed".

b) Explain the synchronization methods with an example. [5+5]

OR

7.a) Write a program to implement a producer and consumer problem by using multithreading.

b) Explain the java built in exceptions. [5+5]

8.a) Write a program to compute an average of the values in a file.

b) Explain the methods defined by Math. [5+5]

OR

9.a) Explain the different types of drivers used in JDBC.

b) Write a program to store the names of bank depositors and their current balances by using hash table. [5+5]

10.a) Write a java program to design a scientific calculator using AWT.

b) What are the different types of Event listeners supported by java? [5+5]

OR

11.a) Write a program using an applet which will print "key pressed" on the status Window when you press the key, "key released" on status window when you release the key and when you type the characters it should print "hello" at co-ordinates (50,50) on Applet.

b) Explain the various components in Swing. [5+5]

--ooOoo--

Code No: 54012 **R09**

JAWAHARLAL NEHRU TECHNOLOGICAL UNIVERSITY HYDERABAD
B.Tech II Year II Semester Examinations, May - 2017
ELECTRICAL MACHINES-II
(Electrical and Electronics Engineering)

Time: 3 hours **Max. Marks: 75**

Answer any five questions
All questions carry equal marks

---

1. Draw and Explain the operation on no-load and on-load phasor diagrams of single phase transformer in detail. [15]

2.a) Obtain the equivalent circuit of a single phase transformer. Explain in detail.
b) How do you calculate voltage regulation and efficiency of a transformer from equivalent circuit parameters? [7+8]

3.a) Define Regulation of a single phase transformer.
b) The full load copper loss and iron losses of a 15 KVA single phase transformer are 320W and 200W respectively. Calculate the efficiency of the transformer on (i) full load, (ii) half load, when the load power factor is 0.8 lagging in each case. [7+8]

4. A delta-delta bank consisting of three 20 kVA, 2300/230V transformers supplies a load of 40KVA, if one transformer is removed, find for the resulting V-V connection.
a) KVA load carried by each transformer
b) Percentage of rated load carried by each transformer
c) Total KVA rating of the V-V bank.
d) Ratio of the V-V bank to delta-delta bank transformer ratings.
e) Percent increase in load on each transformer when bank is converted into V-V bank. [15]

5. Compare cage and wound type 3-phase induction motor with reference to construction, performance and applications. [15]

6. Derive an expression for torque developed by a 3-phase induction motor. Draw a typical torque-slip characteristic and deduce the condition for maximum torque. [15]

7. A 3-phase induction motor has full-load output of 18.65 KW at 220V, 720 r.p.m. The full-load power factor is 0.83 and efficiency is 85%. When running light, the motor takes 5A at 0.2 power factor. Draw the circle diagram and use it to determine the maximum torque which the motor can exert:
a) in Nm
b) in terms of full-load torque and
c) in terms of the starting torque. [5+5+5]

8. Discuss the pole-change methods of speed control of 3-phase induction motors. [15]

---ooOoo---

R09

Code No: 54015

JAWAHARLAL NEHRU TECHNOLOGICAL UNIVERSITY HYDERABAD
B.Tech II Year II Semester Examinations, May - 2017
APPLIED THERMODYNAMICS-I
(Common to ME, AME)

Time: 3 hours **Max. Marks: 75**

Answer any five questions
All questions carry equal marks

1.a) Show that the efficiency of Otto cycle is greater than Diesel cycle for the specified compression ratio by drawing p-v and T-s diagrams.
b) What will be the effect on the efficiency of a diesel cycle having a compression ratio of 20 and cut off ration of 5% of the swept volume if the C_v increased by 1%. [7+8]

2.a) Draw the schematic diagram of a Simple carburetor and explain its functionality with different conditions.
b) What are different types of nozzles used in C.I. Engine fuel injector and explain its working. [8+7]

3.a) Explain the phenomena of detonation in S.I. Engine? What are different parameters influence the knocking in S.I. Engine.
b) What are the different required characteristics of a good combustion chamber for S.I. Engine? Explain. [8+7]

4.a) What is the difference between physical delay and chemical delay? Explain its importance.
b) Explain the working principle of pre-combustion chamber with the suitable diagram. [8+7]

5.a) Explain Willian's line method of determination of frictional power and explain why this method is not used for petrol engines.
b) A single cylinder, four-stroke gas engine has a bore of 180 mm and a stroke of 330 mm and is governed on the hit and miss principle. When running at 400 rpm at full load indicator card are taken which give a working loop mean effective pressure of 6 bar and a pumping loop mean effective pressure of 0.4 bar. Diagrams fro the dead cycle give a mean effective pressure of 0.6 bar. When running on no load a mechanical counter recorded 50 firings strokes per minute. Calculate at the full load with regular firing, brake power and the mechanical efficiency of the engine. [7+8]

6.a) Derive the equation for optimum pressure ratio of two stage reciprocating air compressor with perfect inter cooling.
b) A single stage single acting air compressor running at 900 rpm delivers air at 12 bar. The induction and free air conditions can be taken as 1 bar and 300 K and the free air delivery as 0.5 m^3/min. The clearance volume is 3% of the swept volume and the stroke to bore ratio is 1. Calculate the bore and stroke, the volumetric efficiency, the indicated power and the isothermal efficiency. Assume the index of compression as 1.3. [7+8]

7.a) Draw the mechanical details of Roots blower and explain the principle of operation.

b) A centrifugal air compressor having internal and external diameters of 250 mm and 500 mm respectively compresses 30 kg of air per minute while running at 4000 rpm. The vane angles at inlet and outlet are 30^0 and 40^0 respectively. Find the necessary thickness of the blade, if the impeller contains 40 blades. Take specific volume air as 0.8 m^3/kg. [7+8]

8.a) Derive the expression for the pressure ratio in each stage of multi stage axial flow air compressor.

b) Determine the stage efficiency and work done factor of an axial flow compressor if the actual pressure developed was 1.35 and the actual temperature rise is 30 K. The blade inlet and outlet angles are 47^0 and 15^0 respectively. The peripheral and axial velocities are 225 m/s and 180 m/s respectively. [7+8]

---ooOoo---

R09

Code No: 54055

JAWAHARLAL NEHRU TECHNOLOGICAL UNIVERSITY HYDERABAD
B.Tech II Year II Semester Examinations, May - 2017
FORMAL LANGUAGES AND AUTOMATA THEORY
(Computer Science and Engineering)

Time: 3 hours **Max. Marks: 75**

Answer any five questions
All questions carry equal marks

1.a) Identify all possible strings up to length 4 accepted by below DFA shown in figure 1.

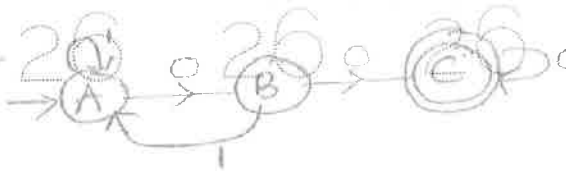

Figure: 1

b) Let $L_1 = \{00,11\}$, $L_2=\{01,1\}$, Then find (i) L_1^* (ii) L_1L_2 (iii) $L_2+L_1^*$ (iv) $L_2 L_1^*$. [7+8]

2.a) Construct DFA for given NFA with E-Moves shown in figure 2.

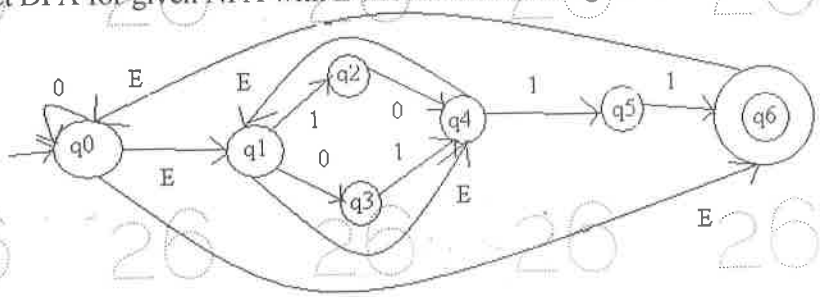

Figure: 2

b) Design a DFA for the all strings over {0, 1} which contains exactly two zeros. [8+7]

3.a) Construct Finite automata for the regular expression (0+1)*1101*.

b) Write about closure properties of regular languages. [8+7]

4.a) Find the finite automata for the grammar G = ({A,B,C},{0,1},P,A), Where P is given as
A→ 1A | 0B, B→ 1A | 0C | 0, C→ 0C | 1C | 0 | 1

b) Draw the parse tree for the string 000111 for the grammar S→0S1 | 01. [9+6]

5.a) Define Chomsky Normal Form(CNF). Convert the following grammar to CNF
S → 0S0 | 1S1 | Є

b) Define Pumping lemma for CFLs. Show that $L = \{a^n b^n c^n \mid n>=1\}$ is not CFL. [8+7]

6.a) Convert the following context free grammar to it's equivalent PDA
E→ E + T | T, T→ T * F | F, F→ (E)| i

b) Design PDA for the language $L = \{a^n b^m c^{n+m} \mid n, m >= 1\}$. [8+7]

7.a) Write the properties of recursive and recursive enumerable languages.

b) Describe Church's hypothesis. [8+7]

8.a) Define P and NP problems.

b) Let $\sum = \{0, 1\}$ and A, B be the list of 3 strings each. Verify below PCP has a solution or not? [8+7]

	List A	List B
i	w_i	x_i
1	00	0
2	001	11
3	1000	011

---ooOoo---

17-May-2017 (FN)

Code No: 124DM **R15**

JAWAHARLAL NEHRU TECHNOLOGICAL UNIVERSITY HYDERABAD
B.Tech II Year II Semester Examinations, May - 2017
PRODUCTION TECHNOLOGY
(Common to ME, MCT, AME, MSNT)

Time: 3 Hours **Max. Marks: 75**

Note: This question paper contains two parts A and B.
Part A is compulsory which carries 25 marks. Answer all questions in Part A.
Part B consists of 5 Units. Answer any one full question from each unit.
Each question carries 10 marks and may have a, b, c as sub questions.

PART- A

(25 Marks)

1.a) Explain briefly about sweep pattern and match plate pattern. [2]
b) A rectangular block of dimensions 80 × 50 × 20 mm is to be made from cast iron by the casting process. The mould for this job is made using a wooden pattern. Determine the dimensions of wooden pattern if machining allowance is 2mm on each side, shrinkage allowance of 2% and taper allowance of 1^0. [3]
c) In a resistance welding process if the current of 10000 A supplied for 0.1 sec through a 100 μΩ resistance joint, what is the heat input required at weld joint? [2]
d) A rail track was broken at a remote location, which welding technique do you suggest? Given the reason. [3]
e) Name any two non-destructive tests used for finding welding defects. [2]
f) What does each term in E-3-2-2-5-411-P in electrode designation represent? [3]
g) What is strain hardening? [2]
h) Write three differences between cold working and hot working. [3]
i) What is fullering and edging in forging operation? [2]
j) Write any three differences between forward and backward hot extrusion process. [3]

PART-B

(50 Marks)

2. A cylindrical riser with diameter-to-length ratio =1 is to be designed for a sand casting mold. The casting geometry is shown in figure, in which the units are in inches. If the mold constant is Chvorinov's rule (proportionality constant) = 19.5 min/in^2, n=2, determine the dimensions of the riser so that the riser will take 0.5 min longer to freeze than casting itself. [10]

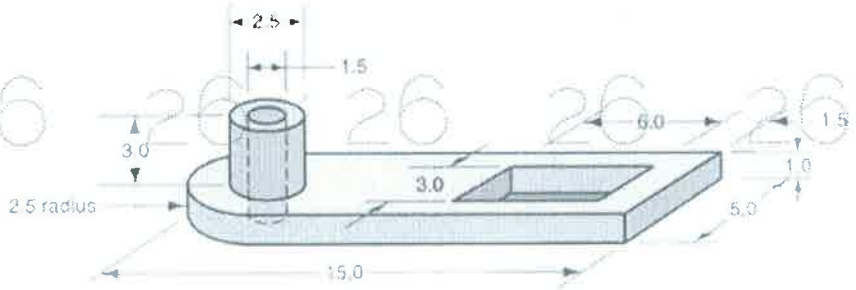

OR

3. Explain the working principle of shell mould casting, hot chamber and cold chamber die casting process. [10]

4.a) Why do we do the edge preparation before welding? What are the different ways of edge preparation techniques?

b) Write primary and secondary combustion equations in oxy-acetylene gas welding process. Is it an endothermic process or exothermic process? [6+4]

OR

5.a) In a given arc-welding operation, the power source is at 20V and current is at 300 A. If the electrode travel speed is 6 mm/s, calculate the cross-sectional area of the joint. The heat transfer efficiency is 0.8 and melting efficiency is 0.30. Heat required to melt the steel is 10 J/mm^2.

b) Assume that two 1.5 mm thick steel sheets are being spot welded at a current of 5500 A and current flow time t=0.15 s. Using electrodes 6mm in diameter, estimate the amount of heat generated and its distribution in the weld zone. Use an effective resistance of 250 μΩ. [5+5]

6.a) List any five welding defects and describe the consequences of those defects and remedies.

b) Can we join dissimilar materials? If so give those process names and describe the basic principle of working. [5+5]

OR

7.a) Which welding technology out of TIG/MIG welding uses non consumable electrode? Explain that process with neat diagram.

b) Why DC arc welding is more used than AC arc welding in specialized applications? [5+5]

8.a) Estimate the force required in punching 25 mm^2 area square hole with 2 mm thickness and UTS of the material is 1000 MPa.

b) Draw the neat sketches of two high, three high, four high, tandem, planetary rolling mills. [5+5]

OR

9.a) A 10 mm deep cylindrical cup with diameter of 15 mm is drawn from a circular blank. Neglect the variation in the sheet thickness, what is the diameter of the blank in mm?

b) Why recovery, recrystallization and grain growth are required after plastic deformation of a metal. Explain these process. [7+3]

10. A cylindrical specimen made of annealed 1112 steel (strength coefficient K=750 MPa, strain hardening coefficient n=0.15) has a diameter of 225 mm and 125 mm high. It is upset at room temperature, by open die forging with flat dies to a height of 50 mm. Assuming that the coefficient of friction is 0.2, calculate upsetting force required at the end of the stroke. Use average pressure formula. [10]

OR

11. A copper billet 150 mm in diameter and 325 mm long is extruded at 1123 K at a speed of 300 m/s. Using square dies and assuming poor lubrication, estimate the force required in this operation if the extruded diameter is 75 mm, where strength coefficient C= 240 MPa and strain rate sensitivity coefficient m=0.06. [10]

---ooOoo---

Code No: 124AG

R15

JAWAHARLAL NEHRU TECHNOLOGICAL UNIVERSITY HYDERABAD
B.Tech II Year II Semester Examinations, May - 2017
FORMAL LANGUAGES AND AUTOMATA THEORY
(Computer Science and Engineering)

Time: 3 Hours **Max. Marks: 75**

Note: This question paper contains two parts A and B.
Part A is compulsory which carries 25 marks. Answer all questions in Part A.
Part B consists of 5 Units. Answer any one full question from each unit.
Each question carries 10 marks and may have a, b, c as sub questions.

PART- A

(25 Marks)

1.a) Define Transition Table. [2]
b) Explain the difference between DFA and NFA. [3]
c) Construct CFG to generate strings with any number of 1's. [2]
d) Explain Leftmost Derivation with an example. [3]
e) Construct PDA for the language $L = \{a^m b^m c^n \mid m, n \geq 1\}$ [2]
f) Define Ambiguity in CFG with an example. [3]
g) Explain about Turing Machine. [2]
h) Write a short note on Recursive languages. [3]
i) List the properties of type-3 grammar. [2]
j) Define Context-sensitive grammar. [3]

PART-B

(50 Marks)

2.a) Construct NFA with ε which accepts a language consisting the strings of any number of 0's followed by any number of 1's followed by any number of 2's.
b) Check whether the following two FSM's are equivalent. [5+5]

M1	0	1
→ A	B	D
(B)	A	C
C	D	B
(D)	C	A

M2	0	1
→ P	(R)	R
Q	R	P
(R)	P	Q

OR

3.a) Define Moore and Mealy machines with examples.
b) Design FA to accept string with 'a' and 'b' such that the number of a's are divisible by 3. [5+5]

4.a) Construct the left linear grammar for the language (0+1)*00(0+1)*.
b) Apply pumping lemma for the language $L=\{a^n/n$ is prime$\}$ and prove that it is not regular. [5+5]

OR

5. Design a FA for the following Languages
   a) (0*1*)*
   b) (0+1)*111*
   c) (0*11*+101). [3+3+4]

6.a) Find the GNF equivalent to the following
   $S \rightarrow AA \mid a$
   $A \rightarrow SS \mid b$

   b) Convert the following grammar to a PDA that accepts the language by empty stack
   $S \rightarrow 0S1|A$
   $A \rightarrow 1A0|S|\varepsilon$. [5+5]

OR

7.a) Eliminate Useless symbols from the following grammar
   $S \rightarrow aA \mid a \mid Bb \mid cC$
   $A \rightarrow aB$
   $B \rightarrow a \mid Aa$
   $C \rightarrow cCD$
   $D \rightarrow ddd$

   b) Construct CFG for the PDA $M = (\{q_0,q_1\}, \{0,1\}, \{R,Z_0\}, \delta, q_0, Z_0, \Phi)$ and δ is given by
   $\delta(q_0,1,Z_0)=(q_0,RZ_0)$
   $\delta(q_0,1,R)=(q_0,RR)$
   $\delta(q_0,0,R)=(q_1,R)$
   $\delta(q_1,0,Z_0)=(q_0,Z_0)$
   $\delta(q_0,\varepsilon,Z_0)=(q_0,\varepsilon)$
   $\delta(q_1,1,R)=(q_1,\varepsilon)$. [5+5]

8.a) Design a Turing Machine to accept $L=\{WW^R \mid W \text{ is in } (a+b)^*\}$.
   b) Design a TM to recognize the language $L= \{1^n2^n3^n \mid n \geq 1\}$. [5+5]

OR

9.a) Design TM which will recognize strings containing equal number of 0's and 1's.
   b) Design TM that accepts the language 00*. [5+5]

10.a) Explain Chomsky hierarchy of Languages.
   b) Write short note on NP- hard and NP-complete problem. [5+5]

OR

11.a) Discuss about universal turing Machine.
   b) Define post's correspondence problem and show that it is undecidable. [5+5]

---ooOoo---

Code No: 124DT

R15

JAWAHARLAL NEHRU TECHNOLOGICAL UNIVERSITY HYDERABAD

B.Tech II Year II Semester Examinations, May - 2017

SWITCHING THEORY AND LOGIC DESIGN

(Electrical and Electronics Engineering)

Time: 3 Hours **Max. Marks: 75**

Note: This question paper contains two parts A and B.
Part A is compulsory which carries 25 marks. Answer all questions in Part A.
Part B consists of 5 Units. Answer any one full question from each unit.
Each question carries 10 marks and may have a, b, c as sub questions.

PART - A **(25 Marks)**

1.a) AB+A′C+BC = AB+A′C represents which theorem. [2]
b) How do you obtain dual of an expression? [3]
c) What are don't cares? [2]
d) Explain the wired logic. [3]
e) Compare latch and flip flop. [2]
f) Explain the timing considerations of sequential circuits. [3]
g) What are the drawbacks of ripple counters? [2]
h) Explain about state diagram. [3]
i) List the capabilities of finite state machine. [2]
j) Explain about ASM chart. [3]

PART - B **(50 Marks)**

2.a) Convert the given Gray code number to equivalent binary 0010010111110010.
b) Convert $(A0F9.0EBA98.0DC)_{16}$ to decimal, binary, octal. [5+5]

OR

3.a) Simplify the following Boolean expressions using the Boolean theorems.
(i) (A+B+C) (B′+C) + (A+D) (A′+C) (ii) (A+B) (A+B′) (A′+B)
b) Why a NAND and NOR gates are known as universal gates? Simulate all the basic Gates. [5+5]

4.a) Minimize the following expressions using K-map and realize using NAND Gates.
f = ∑m (1, 3, 5, 8, 9, 11, 15) +d (2, 13).
b) Simplify the following boolean function using Tabular method.
F(A,B,C,D)=∑m(0,1,2,5,7,8,9,10,13,15) [5+5]

OR

5. With the help of Logic diagram and Truth Table, discuss 8×1 Multiplexer and then realize $f(x,y,z)=\sum m(1,2,4,7)$ using 8×1 MUX as well as using 4×1 MUX. [10]

6.a) Explain the operation JK master slave flip flop. Explain its truth table.
b) Explain the realization of SR flip-flop, JK flip-flop using D flip-flop. [5+5]

OR

7.a) Realize D-FF and T-FF using JK-FF. Draw the logic diagrams with their truth tables.
b) Deduce the design procedure for sequential logic circuits and give the classification of sequential logic circuits. [5+5]

8.a) Design and explain a synchronous MOD-12 down-counter using j-k flipflop.
b) Design and explain a 4-bit ring counter using D-flip flops with relevant timing diagrams. [5+5]

OR

9.a) Design a MOD-10 ripple counter.
b) Design and construct MOD-5 synchronous counter using JK flip flops. [5+5]

10.a) What are the capabilities and limitations of finite state machines? Discuss.
b) Explain the procedure for state minimization using merger graph and merger table. [5+5]

OR

11.a) Differentiate between an ASM chart and a conventional flow chart.
b) Explain in detail the ASM technique of designing a sequential circuit. [5+5]

--ooOoo--

Code No: 124CT

R15

JAWAHARLAL NEHRU TECHNOLOGICAL UNIVERSITY HYDERABAD
B.Tech II Year II Semester Examinations, May - 2017
DESIGN AND ANALYSIS OF ALGORITHMS
(Information Technology)

Time: 3 Hours **Max. Marks: 75**

Note: This question paper contains two parts A and B.
Part A is compulsory which carries 25 marks. Answer all questions in Part A.
Part B consists of 5 Units. Answer any one full question from each unit.
Each question carries 10 marks and may have a, b, c as sub questions.

PART - A **(25 Marks)**

1. Write short notes on the following.
   a) Space complexity. [2]
   b) Bi-connected components. [3]
   c) Single source shortest path problem. [2]
   d) Concept of job sequencing problem. [3]
   e) Multistage graphs. [2]
   f) Reliability design. [3]
   g) Graph coloring. [2]
   h) Branch and bound. [3]
   i) Clique decision problem. [2]
   j) Cook's theorem. [3]

PART - B **(50 Marks)**

2.a) Explain UNION algorithm with example.
b) Write short notes on amortized complexity. [5+5]

OR

3. Explain about Strassen's matrix multiplication and derive time complexity. [10]

4. Discuss Prim's and kruskal's algorithms. [10]

OR

5.a) Discuss the general method of greedy approach.
b) Find the optimal solution of greedy knapsack where n=3, $(p_1,p_2,p_3)=(30,21,18)$, $(w_1,w_2,w_3)=(18,15,10)$ and knapsack capacity m=20. [5+5]

6. Explain all pairs shortest paths algorithm. [10]

OR

7. Explain traveling sales person problem and discuss its time complexity. [10]

8.a) Write short notes on backtracking general method.
b) Solve the following sum of subsets problem using state space tree. W = (7,11,13,24) and m=31. [5+5]

OR

9. Solve the following knapsack problem using branch and bound technique. n=4, $(p_1,p_2,p_3,p_4)=(10,10,12,18)$, $(w_1,w_2,w_3,w_4)=(2,4,6,9)$ and capacity m=15. [10]

10.a) Write a nondeterministic algorithm for sorting.
b) Explain the concept of satisfiability. [5+5]

OR

11. Explain P and NP class problems in detail. [10]

---ooOoo---

R15

Code No: 124DP

JAWAHARLAL NEHRU TECHNOLOGICAL UNIVERSITY HYDERABAD
B.Tech II Year II Semester Examinations, May - 2017
STRENGTH OF MATERIALS – II
(Common to CE, CEE)

Time: 3 Hours **Max. Marks: 75**

Note: This question paper contains two parts A and B.
Part A is compulsory which carries 25 marks. Answer all questions in Part A. Part B consists of 5 Units. Answer any one full question from each unit. Each question carries 10 marks and may have a, b, c as sub questions.

PART- A

(25 Marks)

1.a) State the fundamental assumptions made in the theory of torsion. [2]
b) Write an expression for strain energy stored in a shaft of uniform section subjected to torsion. [3]
c) What are the limitations of Euler's column theory? [2]
d) State the assumptions made in Winkler Bach theory for curved beams? [3]
e) What is a beam column? Give an example. [2]
f) What do you mean by core of a column section? [3]
g) What are the causes for unsymmetrical bending of beams? [2]
h) Define shear centre. [3]
i) Outline qualitative stress and pressure diagram across the cross section of a thick cylinder subjected to internal pressure. [2]
j) State the assumptions made in Lame's theory for the analysis of thick cylinders. [3]

PART-B

(50 Marks)

2.a) Compare the weight of a solid shaft with that of a hollow one having same length to transmit a given power at a given speed, if the material used for the shafts is the same. Take the inside diameter of the hollow shaft as 0:6 times the outer diameter.
b) A hollow shaft is to transmit 300 kW at 80 rpm. The internal diameter is 0.6 of the external diameter. The maximum torque is 40% more than the mean torque. If the shear stress is not to exceed 60 N/mm^2, find the external and internal diameters of the shaft. [5+5]

OR

3.a) A hollow shaft with external and internal diameters of 120mm and 80 mm respectively is to be replaced by a solid shaft of the same weight. Find the torques transmitted by the shafts if the permissible shear stress is 100 MPa. If the solid shaft is replaced by a hollow shaft of 160 mm external diameter, what is the torque transmitted for the same weight of the shafts?
b) For a close-coiled helical spring subjected to an axial load of 300 N having 12 coils of wire diameter of 16mm, and made with coil diameter of 250 mm, find: (i) Axial deflection (ii) Strain energy stored (iii) Maximum torsional shear stress in the wire. Take modulus of rigidity as 80 GN/m^2. [5+5]

4.a) A 4 m long hollow circular cast iron column with fixed ends has 200 mm external diameter and 20 mm thickness. The column carries a load of 130 kN at an eccentricity of 30 mm from the axis of the column. Determine (i) the extreme stresses on the cross-section and (ii) the maximum eccentricity when there is no tension anywhere on the cross-section. The elastic modulus-of the material of the column is 60 GPa.

b) Derive the Winkler- Bach formula to calculate the stress in a curved beam subjected to bending. [5+5]

OR

5.a) Derive an expression for Euler's critical load of a column with one end fixed and the other end hinged from first principles.

b) Determine the section of a cast iron hollow cylindrical column 3 m long with both ends fixed, if it carries an axial load of 800 kN. The ratio of internal to external diameter of the column is 5/8. Use Rankine's formula by taking the Rankine's constant as 1/1600 and working crushing strength of material as 550 N/mm^2. [5+5]

6.a) A strut 30mm diameter and 2.2 m long is hinged at both ends. It carries a uniformly distributed load of 60 N/m in addition to an axial thrust of 8000N. Calculate the maximum stress. E=200 GPa.

b) Explain and draw in detail about possible stress distributions in case of an eccentrically loaded column. [5+5]

OR

7.a) Illustrate with suitable examples about Middle-third rule and one-fourth diameter rule.

b) A rod, 2m in length and of rectangular cross-section 88 mm × 44 mm is supported horizontally through pin joints. It carries a vertical load of 3.3 kN/m length and an axial thrust of 110 kN. If E = 208 kN/mm^2, calculate the maximum stress induced. [5+5]

8.a) Analyze the shear center of a channel section of 400 mm × 200 mm outside and 5 mm thick.

b) Explain the concept of unsymmetrical bending. What are the conditions that should be satisfied for a beam to bend without twisting? [5+5]

OR

9.a) Derive general equations for Unsymmetrical bending and also state the assumptions made in analyzing a beam for unsymmetrical bending.

b) Explain the concept of shear centre with a suitable example. [5+5]

10.a) In case of cylindrical shells, what is done to enhance their pressure-bearing capacity? Explain how the shell behaves when such steps are taken.

b) A thick spherical shell, of 250 mm internal diameter is subjected to an internal pressure of 8 N/mm^2. If the maximum permissible tensile stress is 10MPa, find the minimum thickness required. Find the stresses in the interior and exterior of the shell. [5+5]

OR

11.a) Estimate the maximum and minimum hoop stress across the sections of pipe of 400 mm internal diameter and 100 mm thick, the pipe contains a fluid at a pressure of 8N/mm^2. Also sketch the radial pressure distribution and hoop stress distribution across the section.

b) Which shell is more efficient in resisting pressure-the cylindrical or the spherical shell? Why? [5+5]

---ooOoo---

Code No: 114DM **R13**

JAWAHARLAL NEHRU TECHNOLOGICAL UNIVERSITY HYDERABAD

B.Tech II Year II Semester Examinations, May - 2017

PRODUCTION TECHNOLOGY

(Common to ME, MCT, AME, MSNT)

Time: 3 Hours **Max. Marks: 75**

Note: This question paper contains two parts A and B.
Part A is compulsory which carries 25 marks. Answer all questions in Part A.
Part B consists of 5 Units. Answer any one full question from each unit.
Each question carries 10 marks and may have a, b, c as sub questions.

PART- A

(25 Marks)

1.a) Explain briefly about sweep pattern and match plate pattern. [2]

b) A rectangular block of dimensions 80 × 50 × 20 mm is to be made from cast iron by the casting process. The mould for this job is made using a wooden pattern. Determine the dimensions of wooden pattern if machining allowance is 2mm on each side, shrinkage allowance of 2% and taper allowance of 1^0. [3]

c) In a resistance welding process if the current of 10000 A supplied for 0.1 sec through a 100 μΩ resistance joint, what is the heat input required at weld joint? [2]

d) A rail track was broken at a remote location, which welding technique do you suggest? Given the reason. [3]

e) Name any two non-destructive tests used for finding welding defects. [2]

f) What does each term in E-3-2-2-5-411-P in electrode designation represent? [3]

g) What is strain hardening? [2]

h) Write three differences between cold working and hot working. [3]

i) What is fullering and edging in forging operation? [2]

j) Write any three differences between forward and backward hot extrusion process. [3]

PART-B

(50 Marks)

2. A cylindrical riser with diameter-to-length ratio =1 is to be designed for a sand casting mold. The casting geometry is shown in figure, in which the units are in inches. If the mold constant is Chvorinov's rule (proportionality constant) = 19.5 min/in^2, n=2, determine the dimensions of the riser so that the riser will take 0.5 min longer to freeze than casting itself. [10]

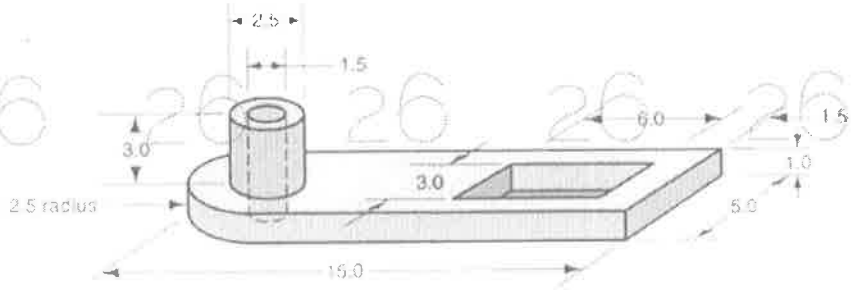

OR

3. Explain the working principle of shell mould casting, hot chamber and cold chamber die casting process. [10]

4.a) Why do we do the edge preparation before welding? What are the different ways of edge preparation techniques?

b) Write primary and secondary combustion equations in oxy-acetylene gas welding process. Is it an endothermic process or exothermic process? [6+4]

OR

5.a) In a given arc-welding operation, the power source is at 20V and current is at 300 A. If the electrode travel speed is 6 mm/s, calculate the cross-sectional area of the joint. The heat transfer efficiency is 0.8 and melting efficiency is 0.30. Heat required to melt the steel is 10 J/mm^2.

b) Assume that two 1.5 mm thick steel sheets are being spot welded at a current of 5500 A and current flow time t=0.15 s. Using electrodes 6mm in diameter, estimate the amount of heat generated and its distribution in the weld zone. Use an effective resistance of 250 μΩ. [5+5]

6.a) List any five welding defects and describe the consequences of those defects and remedies.

b) Can we join dissimilar materials? If so give those process names and describe the basic principle of working. [5+5]

OR

7.a) Which welding technology out of TIG/MIG welding uses non consumable electrode? Explain that process with neat diagram.

b) Why DC arc welding is more used than AC arc welding in specialized applications? [5+5]

8.a) Estimate the force required in punching 25 mm^2 area square hole with 2 mm thickness and UTS of the material is 1000 MPa.

b) Draw the neat sketches of two high, three high, four high, tandem, planetary rolling mills. [5+5]

OR

9.a) A 10 mm deep cylindrical cup with diameter of 15 mm is drawn from a circular blank. Neglect the variation in the sheet thickness, what is the diameter of the blank in mm?

b) Why recovery, recrystallization and grain growth are required after plastic deformation of a metal. Explain these process. [7+3]

10. A cylindrical specimen made of annealed 1112 steel (strength coefficient K=750 MPa, strain hardening coefficient n=0.15) has a diameter of 225 mm and 125 mm high. It is upset at room temperature, by open die forging with flat dies to a height of 50 mm. Assuming that the coefficient of friction is 0.2, calculate upsetting force required at the end of the stroke. Use average pressure formula. [10]

OR

11. A copper billet 150 mm in diameter and 325 mm long is extruded at 1123 K at a speed of 300 m/s. Using square dies and assuming poor lubrication, estimate the force required in this operation if the extruded diameter is 75 mm, where strength coefficient C= 240 MPa and strain rate sensitivity coefficient m=0.06. [10]

---ooOoo---

Code No: 114AG

R13

JAWAHARLAL NEHRU TECHNOLOGICAL UNIVERSITY HYDERABAD
B.Tech II Year II Semester Examinations, May - 2017
FORMAL LANGUAGES AND AUTOMATA THEORY
(Computer Science and Engineering)

Time: 3 Hours **Max. Marks: 75**

Note: This question paper contains two parts A and B.
Part A is compulsory which carries 25 marks. Answer all questions in Part A.
Part B consists of 5 Units. Answer any one full question from each unit.
Each question carries 10 marks and may have a, b, c as sub questions.

PART- A

(25 Marks)

1.a) Define Transition Table. [2]
b) Explain the difference between DFA and NFA. [3]
c) Construct CFG to generate strings with any number of 1's. [2]
d) Explain Leftmost Derivation with an example. [3]
e) Construct PDA for the language $L=\{a^m b^m c^n \mid m, n \geq 1\}$ [2]
f) Define Ambiguity in CFG with an example. [3]
g) Explain about Turing Machine. [2]
h) Write a short note on Recursive languages. [3]
i) List the properties of type-3 grammar. [2]
j) Define Context-sensitive grammar. [3]

PART-B

(50 Marks)

2.a) Construct NFA with ε which accepts a language consisting the strings of any number of 0's followed by any number of 1's followed by any number of 2's.
b) Check whether the following two FSM's are equivalent. [5+5]

M1	0	1
→ A	B	D
(B)	A	C
C	D	B
(D)	C	A

M2	0	1
→ P	R	R
Q	R	P
(R)	P	Q

OR

3.a) Define Moore and Mealy machines with examples.
b) Design FA to accept string with 'a' and 'b' such that the number of a's are divisible by 3. [5+5]

4.a) Construct the left linear grammar for the language (0+1)*00(0+1)*.
b) Apply pumping lemma for the language $L=\{a^n/n$ is prime$\}$ and prove that it is not regular. [5+5]

OR

5. Design a FA for the following Languages
   a) (0*1*)*
   b) (0+1)*111*
   c) (0*11*+101). [3+3+4]

6.a) Find the GNF equivalent to the following
   $S \rightarrow AA \mid a$
   $A \rightarrow SS \mid b$

   b) Convert the following grammar to a PDA that accepts the language by empty stack
   $S \rightarrow 0S1|A$
   $A \rightarrow 1A0|S|\varepsilon$. [5+5]

OR

7.a) Eliminate Useless symbols from the following grammar
   $S \rightarrow aA \mid a \mid Bb \mid cC$
   $A \rightarrow aB$
   $B \rightarrow a \mid Aa$
   $C \rightarrow cCD$
   $D \rightarrow ddd$

   b) Construct CFG for the PDA $M = (\{q_0,q_1\}, \{0,1\}, \{R,Z_0\}, \delta, q_0, Z_0, \Phi)$ and δ is given by
   $\delta(q_0,1,Z_0)=(q_0,RZ_0)$
   $\delta(q_0,1,R)=(q_0,RR)$
   $\delta(q_0,0,R)=(q_1,R)$
   $\delta(q_1,0, Z_0)=(q_0, Z_0)$
   $\delta(q_0,\varepsilon, Z_0)=(q_0,\varepsilon)$
   $\delta(q_1,1,R)=(q_1,\varepsilon)$. [5+5]

8.a) Design a Turing Machine to accept $L=\{WW^R \mid W \text{ is in } (a+b)^*\}$.
   b) Design a TM to recognize the language $L= \{1^n2^n3^n \mid n \geq 1\}$. [5+5]

OR

9.a) Design TM which will recognize strings containing equal number of 0's and 1's.
   b) Design TM that accepts the language 00*. [5+5]

10.a) Explain Chomsky hierarchy of Languages.
   b) Write short note on NP- hard and NP-complete problem. [5+5]

OR

11.a) Discuss about universal turing Machine.
   b) Define post's correspondence problem and show that it is undecidable. [5+5]

---ooOoo---

R13

Code No: 114DP

JAWAHARLAL NEHRU TECHNOLOGICAL UNIVERSITY HYDERABAD
B.Tech II Year II Semester Examinations, May - 2017
STRENGTH OF MATERIALS – II
(Common to CE, CEE)

Time: 3 Hours **Max. Marks: 75**

Note: This question paper contains two parts A and B.
Part A is compulsory which carries 25 marks. Answer all questions in Part A. Part B consists of 5 Units. Answer any one full question from each unit. Each question carries 10 marks and may have a, b, c as sub questions.

PART- A

(25 Marks)

1.a) State the fundamental assumptions made in the theory of torsion. [2]
b) Write an expression for strain energy stored in a shaft of uniform section subjected to torsion. [3]
c) What are the limitations of Euler's column theory? [2]
d) State the assumptions made in Winkler Bach theory for curved beams? [3]
e) What is a beam column? Give an example. [2]
f) What do you mean by core of a column section? [3]
g) What are the causes for unsymmetrical bending of beams? [2]
h) Define shear centre. [3]
i) Outline qualitative stress and pressure diagram across the cross section of a thick cylinder subjected to internal pressure. [2]
j) State the assumptions made in Lame's theory for the analysis of thick cylinders. [3]

PART-B

(50 Marks)

2.a) Compare the weight of a solid shaft with that of a hollow one having same length to transmit a given power at a given speed, if the material used for the shafts is the same. Take the inside diameter of the hollow shaft as 0:6 times the outer diameter.
b) A hollow shaft is to transmit 300 kW at 80 rpm. The internal diameter is 0.6 of the external diameter. The maximum torque is 40% more than the mean torque. If the shear stress is not to exceed 60 N/mm^2, find the external and internal diameters of the shaft. [5+5]

OR

3.a) A hollow shaft with external and internal diameters of 120mm and 80 mm respectively is to be replaced by a solid shaft of the same weight. Find the torques transmitted by the shafts if the permissible shear stress is 100 MPa. If the solid shaft is replaced by a hollow shaft of 160 mm external diameter, what is the torque transmitted for the same weight of the shafts?
b) For a close-coiled helical spring subjected to an axial load of 300 N having 12 coils of wire diameter of 16mm, and made with coil diameter of 250 mm, find: (i) Axial deflection (ii) Strain energy stored (iii) Maximum torsional shear stress in the wire. Take modulus of rigidity as 80 GN/m^2. [5+5]

4.a) A 4 m long hollow circular cast iron column with fixed ends has 200 mm external diameter and 20 mm thickness. The column carries a load of 130 kN at an eccentricity of 30 mm from the axis of the column. Determine (i) the extreme stresses on the cross-section and (ii) the maximum eccentricity when there is no tension anywhere on the cross-section. The elastic modulus-of the material of the column is 60 GPa.

b) Derive the Winkler- Bach formula to calculate the stress in a curved beam subjected to bending. [5+5]

OR

5.a) Derive an expression for Euler's critical load of a column with one end fixed and the other end hinged from first principles.

b) Determine the section of a cast iron hollow cylindrical column 3 m long with both ends fixed, if it carries an axial load of 800 kN. The ratio of internal to external diameter of the column is 5/8. Use Rankine's formula by taking the Rankine's constant as 1/1600 and working crushing strength of material as 550 N/mm^2. [5+5]

6.a) A strut 30mm diameter and 2.2 m long is hinged at both ends. It carries a uniformly distributed load of 60 N/m in addition to an axial thrust of 8000N. Calculate the maximum stress. E=200 GPa.

b) Explain and draw in detail about possible stress distributions in case of an eccentrically loaded column. [5+5]

OR

7.a) Illustrate with suitable examples about Middle-third rule and one-fourth diameter rule.

b) A rod, 2m in length and of rectangular cross-section 88 mm × 44 mm is supported horizontally through pin joints. It carries a vertical load of 3.3 kN/m length and an axial thrust of 110 kN. If E = 208 kN/mm^2, calculate the maximum stress induced. [5+5]

8.a) Analyze the shear center of a channel section of 400 mm × 200 mm outside and 5 mm thick.

b) Explain the concept of unsymmetrical bending. What are the conditions that should be satisfied for a beam to bend without twisting? [5+5]

OR

9.a) Derive general equations for Unsymmetrical bending and also state the assumptions made in analyzing a beam for unsymmetrical bending.

b) Explain the concept of shear centre with a suitable example. [5+5]

10.a) In case of cylindrical shells, what is done to enhance their pressure-bearing capacity? Explain how the shell behaves when such steps are taken.

b) A thick spherical shell, of 250 mm internal diameter is subjected to an internal pressure of 8 N/mm^2. If the maximum permissible tensile stress is 10MPa, find the minimum thickness required. Find the stresses in the interior and exterior of the shell. [5+5]

OR

11.a) Estimate the maximum and minimum hoop stress across the sections of pipe of 400 mm internal diameter and 100 mm thick, the pipe contains a fluid at a pressure of 8N/mm^2. Also sketch the radial pressure distribution and hoop stress distribution across the section.

b) Which shell is more efficient in resisting pressure-the cylindrical or the spherical shell? Why? [5+5]

---ooOoo---

Code No: 114CT

R13

JAWAHARLAL NEHRU TECHNOLOGICAL UNIVERSITY HYDERABAD
B.Tech II Year II Semester Examinations, May - 2017
DESIGN AND ANALYSIS OF ALGORITHMS
(Information Technology)

Time: 3 Hours **Max. Marks: 75**

Note: This question paper contains two parts A and B.
Part A is compulsory which carries 25 marks. Answer all questions in Part A.
Part B consists of 5 Units. Answer any one full question from each unit.
Each question carries 10 marks and may have a, b, c as sub questions.

PART - A **(25 Marks)**

1. Write short notes on the following.
   a) Space complexity. [2]
   b) Bi-connected components. [3]
   c) Single source shortest path problem. [2]
   d) Concept of job sequencing problem. [3]
   e) Multistage graphs. [2]
   f) Reliability design. [3]
   g) Graph coloring. [2]
   h) Branch and bound. [3]
   i) Clique decision problem. [2]
   j) Cook's theorem. [3]

PART - B **(50 Marks)**

2.a) Explain UNION algorithm with example.
b) Write short notes on amortized complexity. [5+5]

OR

3. Explain about Strassen's matrix multiplication and derive time complexity. [10]

4. Discuss Prim's and kruskal's algorithms. [10]

OR

5.a) Discuss the general method of greedy approach.
b) Find the optimal solution of greedy knapsack where n=3, $(p_1,p_2,p_3)=(30,21,18)$, $(w_1,w_2,w_3)=(18,15,10)$ and knapsack capacity m=20. [5+5]

6. Explain all pairs shortest paths algorithm. [10]

OR

7. Explain traveling sales person problem and discuss its time complexity. [10]

8.a) Write short notes on backtracking general method.
b) Solve the following sum of subsets problem using state space tree. W = (7,11,13,24) and m=31. [5+5]

OR

9. Solve the following knapsack problem using branch and bound technique. n=4, $(p_1,p_2,p_3,p_4)=(10,10,12,18)$, $(w_1,w_2,w_3,w_4)=(2,4,6,9)$ and capacity m=15. [10]

10.a) Write a nondeterministic algorithm for sorting.
b) Explain the concept of satisfiability. [5+5]

OR

11. Explain P and NP class problems in detail. [10]

---ooOoo---

Code No: 114DT

R13

JAWAHARLAL NEHRU TECHNOLOGICAL UNIVERSITY HYDERABAD
B.Tech II Year II Semester Examinations, May - 2017
SWITCHING THEORY AND LOGIC DESIGN
(Electrical and Electronics Engineering)

Time: 3 Hours **Max. Marks: 75**

Note: This question paper contains two parts A and B.
Part A is compulsory which carries 25 marks. Answer all questions in Part A.
Part B consists of 5 Units. Answer any one full question from each unit.
Each question carries 10 marks and may have a, b, c as sub questions.

PART - A **(25 Marks)**

1.a)	AB+A′C+BC = AB+A′C represents which theorem.	[2]
b)	How do you obtain dual of an expression?	[3]
c)	What are don't cares?	[2]
d)	Explain the wired logic.	[3]
e)	Compare latch and flip flop.	[2]
f)	Explain the timing considerations of sequential circuits.	[3]
g)	What are the drawbacks of ripple counters?	[2]
h)	Explain about state diagram.	[3]
i)	List the capabilities of finite state machine.	[2]
j)	Explain about ASM chart.	[3]

PART - B **(50 Marks)**

2.a) Convert the given Gray code number to equivalent binary 0010010111110010.
b) Convert $(A0F9.0EBA98.0DC)_{16}$ to decimal, binary, octal. [5+5]

OR

3.a) Simplify the following Boolean expressions using the Boolean theorems.
(i) (A+B+C) (B′+C) + (A+D) (A′+C) (ii) (A+B) (A+B′) (A′+B)
b) Why a NAND and NOR gates are known as universal gates? Simulate all the basic Gates. [5+5]

4.a) Minimize the following expressions using K-map and realize using NAND Gates.
f = ∑m (1, 3, 5, 8, 9, 11, 15) +d (2, 13).
b) Simplify the following boolean function using Tabular method.
F(A,B,C,D)=∑m(0,1,2,5,7,8,9,10,13,15) [5+5]

OR

5. With the help of Logic diagram and Truth Table, discuss 8×1 Multiplexer and then realize $f(x,y,z) = \sum m(1,2,4,7)$ using 8×1 MUX as well as using 4×1 MUX. [10]

6.a) Explain the operation JK master slave flip flop. Explain its truth table.
b) Explain the realization of SR flip-flop, JK flip-flop using D flip-flop. [5+5]

OR

7.a) Realize D-FF and T-FF using JK-FF. Draw the logic diagrams with their truth tables.
b) Deduce the design procedure for sequential logic circuits and give the classification of sequential logic circuits. [5+5]

8.a) Design and explain a synchronous MOD-12 down-counter using j-k flipflop.
b) Design and explain a 4-bit ring counter using D-flip flops with relevant timing diagrams. [5+5]

OR

9.a) Design a MOD-10 ripple counter.
b) Design and construct MOD-5 synchronous counter using JK flip flops. [5+5]

10.a) What are the capabilities and limitations of finite state machines? Discuss.
b) Explain the procedure for state minimization using merger graph and merger table. [5+5]

OR

11.a) Differentiate between an ASM chart and a conventional flow chart.
b) Explain in detail the ASM technique of designing a sequential circuit. [5+5]

--ooOoo--

R09

Code No: 54004

JAWAHARLAL NEHRU TECHNOLOGICAL UNIVERSITY HYDERABAD

B.Tech II Year II Semester Examinations, May - 2017

ENVIRONMENTAL STUDIES

(Common to CE, CSE, IT, MMT, ECM, AME, PTM)

Time: 3 hours **Max. Marks: 75**

Answer any five questions

All questions carry equal marks

1.a) Define ecosystem. Give the classification of ecosystems and describe.
b) Distinguish between food chain and food web. [12+3]

2.a) What is a natural resource? Distinguish between renewable and non-renewable energy resources.
b) What are floods? Mention flood control measures. [12+3]

3.a) Define the terms genetic diversity, species diversity and ecosystem diversity.
b) Explain the in-situ and ex-situ measures of conservation of biodiversity. [6+9]

4.a) Define water pollution. What are the various sources of groundwater pollution?
b) Write the impacts of modern agriculture. [9+6]

5.a) Write the global impacts of air pollution.
b) Write about Earth Summit. [12+3]

6.a) What is EIA?
b) What are the different types of environmental impacts? [6+9]

7. Write the salient features of Forest Conservation Act. [15]

8. Define the term sustainable development. Describe the role of an individual in conservation of natural resources. [15]

---ooOoo---

Code No: 54063 **R09**

JAWAHARLAL NEHRU TECHNOLOGICAL UNIVERSITY HYDERABAD
B.Tech II Year II Semester Examinations, May - 2017
MECHANICS OF FLUIDS AND HYDRAULIC MACHINES
(Common to ME, MIE)

Time: 3 hours **Max. Marks: 75**

Answer any five questions
All questions carry equal marks

1.a) Define Viscosity, Specific gravity, Real fluids and ideal fluids, Absolute pressure and gauge pressure and total pressure.
b) State difference between Piezometer and differential manometer. [8+7]

2. Coefficient of discharge for a venturimeter used for measuring the discharge of an incompressible fluid was found to be constant provided that the rate of flow exceeds a certain value. Show that under these conditions the loss of head in the convergent portion of the venturimeter can be expressed by kQ^2 m where k is a constant and Q is the rate of flow in m^3/s. Find k for a venturimeter which has an inlet diameter 5 cm, throat diameter 2.5 cm and constant $C_d = 0.94$. Derive the formula from Bernoulli's principle. [15]

3. Derive Darcy's equation for the determination of loss of head due to friction in pipe. [15]

4.a) A smooth flat plate of size 6 m by 3 m is towed in a liquid of density 900 kg/m^3 and viscosity 0.12 poises at a uniform velocity of 2.5 m/sec. The motion is parallel to the 6 m side of the plate. What is the length of the plate over which the boundary layer is laminar? Calculate the surface drag on both the sides of plate.
b) What is meant by Magnus effect? [8+7]

5. Prove that for a curved radial vane the efficiency is given by $\eta = \frac{2\left(V_{w1}u_1 \pm V_{w2}u_2\right)}{V_1^2}$. [15]

6. Draw a schematic diagram of a Francis turbine and explain briefly its construction and working. [15]

7.a) Explain the terms (i) Cavitation (ii) Water hammer.
b) Draw and explain operating characteristic curves of turbines under constant head. [7+8]

8. A centrifugal pump impeller whose external and internal diameters are 400 mm and 200 mm respectively is running at 950 r.p.m. The rate of flow through the pump is $0.035 m^3/s$. The suction and delivery heads are 5 m and 25 m respectively. The diameters of the suction and delivery pipes are 120 mm and 80 mm respectively. If the outlet vane angle is 45^0, the flow velocity is constant and equal to 1.8 m/s and power required to drive the pump is 15 kW, determine:
a) Inlet vane angle
b) The overall efficiency
c) The manometric efficiency. [15]

---ooOoo---

R09

Code No: 54062

JAWAHARLAL NEHRU TECHNOLOGICAL UNIVERSITY HYDERABAD

B.Tech II Year II Semester Examinations, May - 2017

NETWORK THEORY

(Electrical and Electronics Engineering)

Time: 3 hours **Max. Marks: 75**

Answer any five questions
All questions carry equal marks

1.a) Explain the measurement of active power in a 3-ϕ circuit by two watt meter method.

b) The two wattmeter method is used to measure power in a 3-ϕ load. The wattmeter readings are 400W and -35 W. Calculate i) the total active power ii) reactive power. [7+8]

2.a) Derive the expression for response in a R-L circuit excited by d.c source using time domain approach.

b) For the circuit shown in the figure 1, find the current equation when the switch 'S' is opened at t=0. Use time domain approach. [7+8]

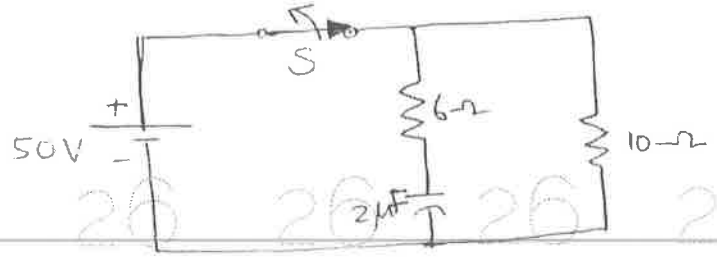

Figure: 1

3. Derive the response of an RLC series circuit when given a sinusoidal excitation. Use time domain approach. [15]

4.a) Define poles and zeroes. Explain the significance of poles and zeros in network functions.

b) For the circuit shown in the figure 2, find $y_{21}(s), z_{11}(s)$. [8+7]

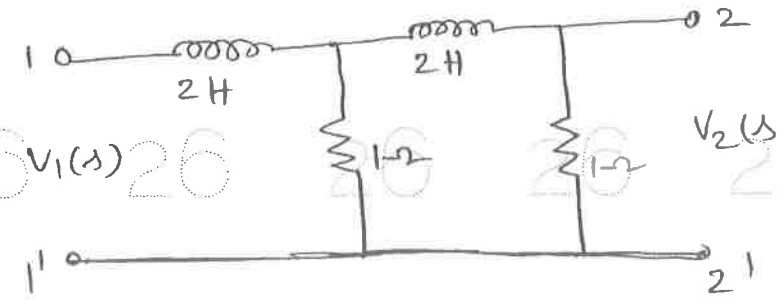

Figure: 2

5. Find the transmission parameters, Y-parameters for the following circuit shown in figure 3. [15]

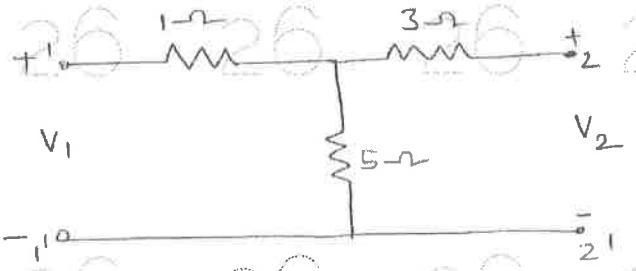

Figure: 3

6. Obtain the z-parameters, hybrid parameters of the following network shown in figure 4. [15]

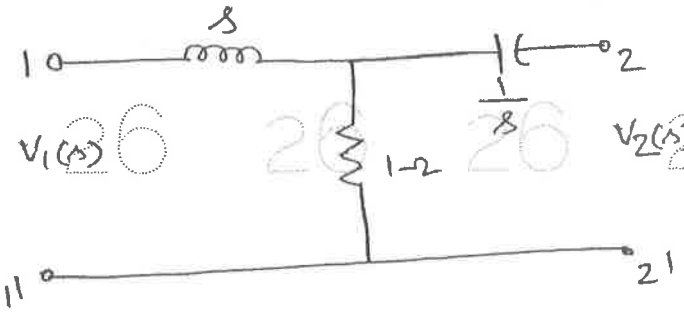

Figure: 4

7.a) Derive the necessary equations for the design of constant-K type low pass filter.

b) Design a low pass filter (both T and π sections) having a cut off frequency of 2kHz to operate with a terminated load resistance of 500 Ω. [7+8]

8.a) The sweep voltage wave form is shown in the figure 5. Find the exponential form of fourier series. Draw the frequency and phase spectrums.

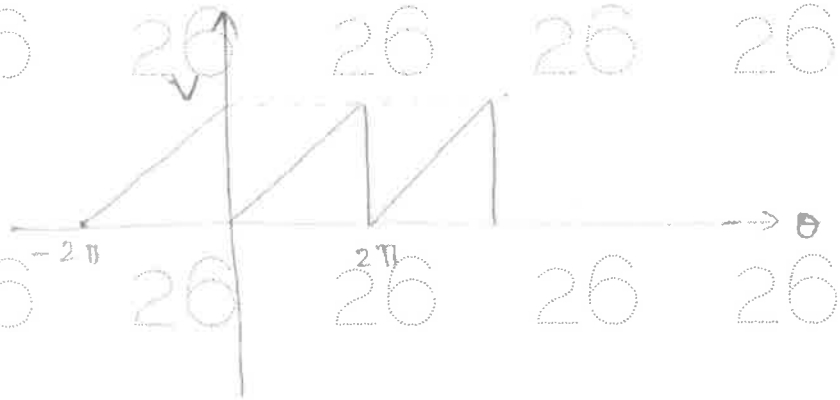

Figure: 5

b) What is Fourier Transform? Explain the properties of Fourier transforms. [10+5]

---oOOo---

R07

Code No: T0221

JAWAHARLAL NEHRU TECHNOLOGICAL UNIVERSITY HYDERABAD

B.Tech II Year II Semester Examinations, May - 2017

POWER SYSTEMS-I

(Electrical and Electronics Engineering)

Time: 3 hours **Max. Marks: 80**

Answer any five questions

All questions carry equal marks

- - -

1.a) Describe the schematic arrangement of a thermal power station and explain the function of each briefly.

b) A steam power station spends Rs. 30 lakhs per annum for coal used in the station. The coal has a calorific value of 5000 kcal/kg and costs Rs. 300 per ton. If the station has thermal efficiency of 33% and the electrical efficiency of 90%, find the average load on the station. [10+6]

2. Differentiate between:
a) Fissile and fertile materials
b) Fission and fusion
c) Natural and enriched uranium. [5+6+5]

3.a) Explain the difference between radial distribution system and ring-main distribution system.

b) Compare underground and over head distribution systems. [8+8]

4.a) Explain a method of solving single phase AC distribution system in which the power factors of loads are referred to respective load voltages.

b) A single phase distributor 2 km long supplies a load of 120 A at 0.8 power factor lagging at its far end and a load of 80 A at 0.9 power factor lagging at its midpoint. Both power factors are referred to the voltage at the far end. The resistance and reactance per km (go and return) are 0.05 ohms and 0.1 ohms respectively. If the voltage at the far end is maintained at 230 V, calculate
i) Voltage at the sending end.
ii) Phase angle between the voltages at the two ends. [8+8]

5. Draw the layout of a typical 11KV/400V Indoor substation and explain the equipments in detail. [16]

6. Explain the importance of voltage control. List out the different methods of voltage control. [16]

7. Define the terms: plant capacity factor and plant use factor and explain their importance in an electric supply system. [16]

8.a) What is power factor tariff? Classify different types of power factor tariffs.

b) A consumer has an annual consumption of 70,800 kWh. The charge is Rs.100 per kW of maximum demand plus 5 paise per kWh.

i) Find the annual bill and the overall costs per kWh if the load factor is 40 %.

ii) What is the overall cost per kWh if:

1) Consumption was reduced by 25 % with the same load factor?

2) Consumption remains the same as in (i) but the load factor is reduced to 30%? [8+8]

---ooOoo---

Code No: 124AA **R15**

JAWAHARLAL NEHRU TECHNOLOGICAL UNIVERSITY HYDERABAD
B.Tech II Year II Semester Examinations, May - 2017
HYDRAULICS AND HYDRAULIC MACHINERY
(Common to CE, CEE)

Time: 3 Hours **Max. Marks: 75**

Note: This question paper contains two parts A and B.
Part A is compulsory which carries 25 marks. Answer all questions in Part A.
Part B consists of 5 Units. Answer any one full question from each unit.
Each question carries 10 marks and may have a, b, c as sub questions.

PART- A **(25 Marks)**

1.a) Differentiate between subcritical flow and supercritical flow. [2]
b) What is hydraulic jump? [3]
c) State Rayleigh's method of dimension analysis. [2]
d) What are geometric, kinematic and dynamic similarities? [3]
e) State the principle of Angular momentum. [2]
f) Explain Hydraulic efficiency, mechanical efficiency and overall efficiency. [3]
g) Explain about surge tank in turbines. [2]
h) Define specific speed of turbine. [3]
i) Differentiate between single stage and multi stage pump. [2]
j) Define utilization factor and capacity factor. [3]

PART-B **(50 Marks)**

2.a) Derive expression for kinetic energy correction factor.
b) Velocity distribution in an open rectangular channel is given by $V=3y^{1/2}$. If the width of the channel is 10 m and the depth of flow is 1m, find the average velocity of the cross section, energy correction factor and momentum correction factor. [5+5]

OR

3.a) Define hydraulic jump. Explain various types of hydraulic jump. Derive the head loss in hydraulic jump.
b) A gate is to be suddenly dropped into a place closing a rectangular channel 2 m deep and 3 m wide in which 6 cumec of water is flowing at a depth of 1.2 m. Will the water spill over the sides? What will be the velocity and height of surge produced? [5+5]

4.a) Explain about different types of forces acting in moving fluid.
b) The pressure difference Δp in a pipe of diameter D and length due to turbulent flow depends on the velocity V, viscosity μ, density ρ and roughness k. Using Buckingham's π-theorem, obtain expression for Δp. [5+5]

OR

5.a) What are different types of dimensionless numbers and explain them?
b) A ship model of scale 1/50 is towed through sea water at a speed of 1 m/s. A force of 2 N is required to tow the model. Determine the speed of ship and propulsive force on the ship, if the prototype is subjected to wave resistance only. [5+5]

6.a) Show that the force exerted by a jet of water on an inclined fixed plate in the direction of the jet is given by $F_x=\rho\ aV^2\ Sin^2\ \theta$, where a = Area of the jet, V = velocity of the jet and θ = inclination of the plate with the jet.

b) A jet of water having a velocity of 20 m/sec strikes a curved vane which is moving with a velocity of 9 m/sec. The vane is symmetrical and is so shaped that the jet is deflected through 120 degrees. Find the angle of the jet at inlet of the vane if there is no shock. What is the absolute velocity of the jet at outlet in magnitude and direction and the work done per second per unit weight of water strikings. Assume the vane to be smooth. [5+5]

OR

7.a) Prove that the force exerted by a jet of water on a fixed semi-circular plate in the direction of the jet when the jet strikes at the centre of the semi-circular plate is two times the force exerted by the jet on an fixed vertical plane.

b) A jet of water of 10 cm diameter is discharging under a constant head of 80 m. Find the force exerted by the jet on a fixed plate. Take coefficient of velocity as 0.9. [5+5]

8.a) What are the uses of a draft tube? Describe with neat sketches different types of draft tubes.

b) A turbine develops 7355 kW under a head of 24.7 m at 210 rpm. What is its specific speed? Indicate the type of turbine suitable for this purpose. If this turbine is tested in the laboratory where the head of water available is only 7.5 m, what power will it develop at what speed? [5+5]

OR

9.a) Define the term unit power, unit speed and unit discharge with reference to a hydraulic turbine. And also derive the expression for these terms.

b) A turbine develops 9000 kW when running at a speed of 140 rpm and under a head of 30 m. Determine the specific speed of the turbine. [5+5]

10.a) Define cavitation. What are the effects of cavitation? Give the necessary precaution against the cavitation.

b) The diameter of an impeller of a centrifugal pump at inlet and outlet are 300 mm and 600 mm respectively. The velocity of flow at outlet is 2.5 m/sec and vanes are set back at an angle of 45 degrees at outlet. Determine the minimum starting speed of the pump if the manometer efficiency is 75%. [5+5]

OR

11.a) What are the various applications of Hydroelectric power plant.

b) A centrifugal pump rotating at 1000 rpm delivers 160 liters/s of water against a head of 30 m. The pump is installed at a place where atmospheric pressure is 1×10^5 P_a(abs.) and vapour pressure of water is 2 kP_a (abs.). The head loss in suction pipe is equivalent to 0.2 m of water. Calculate minimum NPSH. [5+5]

---ooOoo---

R15

Code No: 124AC

JAWAHARLAL NEHRU TECHNOLOGICAL UNIVERSITY HYDERABAD
B.Tech II Year II Semester Examinations, May - 2017
NETWORK THEORY
(Electrical and Electronics Engineering)

Time: 3 Hours **Max. Marks: 75**

Note: This question paper contains two parts A and B.
Part A is compulsory which carries 25 marks. Answer all questions in Part A. Part B consists of 5 Units. Answer any one full question from each unit. Each question carries 10 marks and may have a, b, c as sub questions.

PART- A

(25 Marks)

1.a) Define phase sequence. [2]
b) List the advantages of three phase system over a single phase system. [3]
c) Explain about Steady state or forced response [2]
d) How do you interpretate time constant in transient analysis. [3]
e) Why y-parameters are called as short circuit parameters? [2]
f) Write the condition of reciprocity and symmetry interms of h-parameters. [3]
g) How do you distinguish a Unbalanced and balanced symmetrical T- section. [2]
h) How do you define Voltage and current transfer ratio? [3]
i) What do you understand by complex frequency and its usage? [2]
j) Explain the condition for even function symmetry. [3]

PART-B

(50 Marks)

2.a) How do you measure the active, reactive power and power factor of a balanced three phase load using two wattmeter method?
b) Derive the relationship between line and phase voltages and currents in a star connection. [5+5]

OR

3. A delta connected load has a parallel combination of resistance 5Ω and capacitive reactance –j5Ω in each phase. If a balanced three phase 400V supply is applied between lines, find the phase currents and line currents and draw the phasor diagram. [10]

4. For the following figure 1, the switch is closed at position1at t=0. At t=0.5 m Sec, the switch is moved to position 2. Find the expression for the current in both the condition and Sketch the transient current. [10]

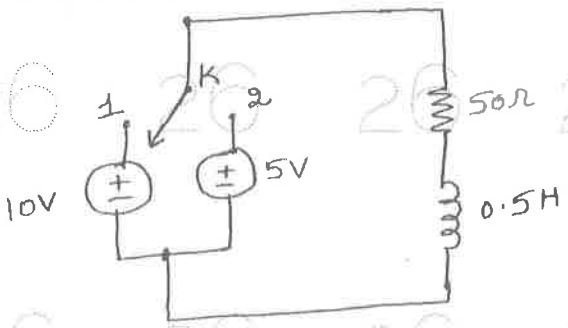

Figure: 1

OR

5. Explain the transient response in time domain with constant DC excitation as input for a RC circuit. Draw the voltage waveform across R and C. [10]

6.a) List the necessary conditions for transfer functions.

b) Find the pole zero locations of the current transfer ratio I_2 / I_1 in s- domain for circuit shown in figure 2. [5+5]

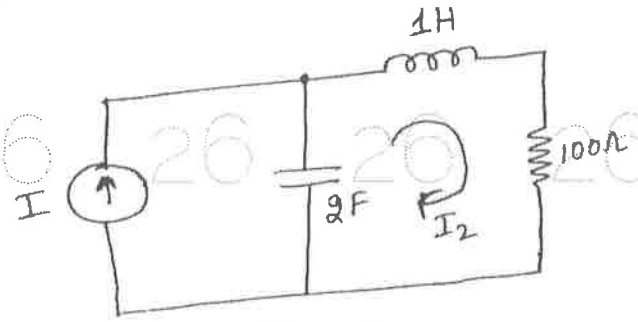

Figure: 2

OR

7. For the network shown below figure 3, 'S' is switched on at t=0. Find the driving point impedance and the source current in s- domain. [10]

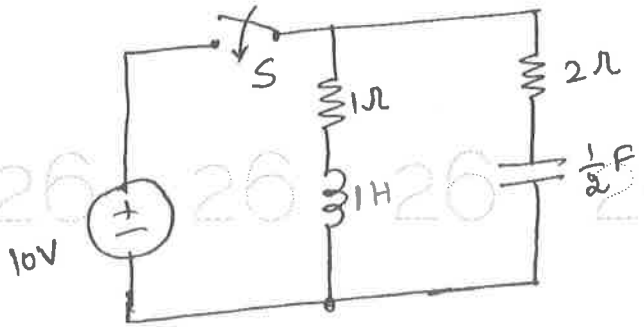

Figure: 3

8.a) Derive the condition for Reciprocity and symmetry in a two port Z - parameter representation.

b) The Z-parameters of a circuit are given by

$$Z_{11} = 4;\ Z_{12} = 1;\ Z_{21} = 3;\ Z_{22} = 3$$

Obtain the transmission parameters. [5+5]

OR

9. Determine the Z-parameters for the network shown in figure 4. [10]

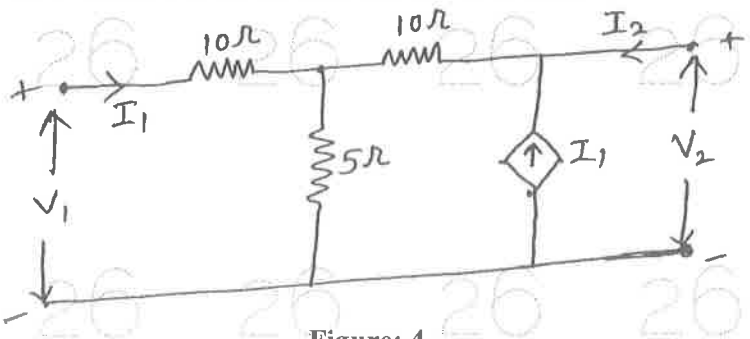

Figure: 4

10.a) Explain in detail about the exponential form of a Fourier Series.

b) List the properties of Fourier transform. [5+5]

OR

11.a) Find a and b coefficients of Fourier series for the following given waveform shown in figure 5.

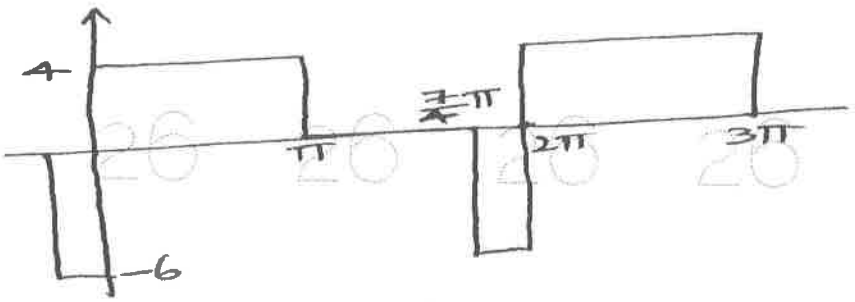

Figure: 5

b) Explain the design procedure of constant 'K' high pass filter. [6+4]

---ooOoo---

Code No: 124DD

R15

JAWAHARLAL NEHRU TECHNOLOGICAL UNIVERSITY HYDERABAD
B.Tech II Year II Semester Examinations, May - 2017
MATHEMATICS – II
(Common to ME, MCT, MIE, MSNT)

Time: 3 Hours **Max. Marks: 75**

Note: This question paper contains two parts A and B.
Part A is compulsory which carries 25 marks. Answer all questions in Part A. Part B consists of 5 Units. Answer any one full question from each unit. Each question carries 10 marks and may have a, b, c as sub questions.

PART- A

(25 Marks)

1.a) Show that $\nabla r^n = nr^{n-2}\vec{r}$, where $\vec{r} = x\hat{i} + y\hat{j} + z\hat{k}$ and $r = |\vec{r}|$. [2]

b) Find the values of a, b, c so that
$\vec{F} = (x + 2y + az)\hat{i} + (bx - 3y - z)\hat{j} + (4x + cy + 2z)\hat{k}$ is irrotational. [3]

c) What are Dirichlet's conditions for the existence of Fourier series? [2]

d) Find the Fourier transform of $f(x) = e^{-|x|}$. [3]

e) Construct the forward difference table from the following data: [2]

x:	0	10	20	30
y:	0	0.174	0.347	0.518

f) Obtain the normal equations for fitting a straight line $y = ax + b$ to the data (x_i, y_i), $i = 1, 2, \ldots\ldots\ldots n$. [3]

g) If the first two approximations x_3 and x_4 for the root of $x^3 - 3x - 4 = 0$ are 2.125 and -3 respectively, find x_5 by the method of false position. [2]

h) Find the LU decomposition for the matrix $A = \begin{pmatrix} 2 & 3 \\ 1 & 2 \end{pmatrix}$. [3]

i) Approximate $\int_0^{\pi} \sin x\,dx$ using the 2-point Gauss-Legendre formula. [2]

j) Evaluate $\int_0^1 \frac{dx}{x}$ using Simpson's $\frac{1}{3}$ rule with $h = \frac{1}{4}$. [3]

PART-B

(50 Marks)

2.a) Find the values of a and b so that the surfaces $ax^2 - byz = (a+2)x$ and $4x^2y + z^3 = 4$ intersect orthogonally at the point (1,-1,2).

b) Prove that $\nabla \times (\nabla \times \vec{F}) = \nabla(\nabla \cdot \vec{F}) - \nabla^2 \vec{F}$. [5+5]

OR

3.a) Find the work done by the force $\vec{F}=\left(3x^2-6yz\right)\hat{i}+\left(2y+3xz\right)\hat{j}+\left(1-4xyz^2\right)\hat{k}$ in moving a particle from (0, 0, 0) to (1, 1, 1) along the curve $C: x=t, y=t^2, z=t^3$.

b) Use Green's theorem to evaluate $\oint_c\left(2xy-x^2\right)dx+\left(x^2+y^2\right)dy$, where c is the boundary of the region enclosed by $y=x^2$ and $y^2=x$. [5+5]

4. Find the Fourier series expansion of the function $f(x)=\begin{cases}2+x, & -2\le x\le 0\\ 2-x, & 0<x\le 2\end{cases}$, $f(x+4)=f(x)$. Hence show that $\frac{1}{1^2}+\frac{1}{3^2}+\frac{1}{5^2}+\ldots\ldots=\frac{\pi^2}{8}$. [10]

OR

5.a) Find the Fourier integral representation of $f(x)=\begin{cases}x, & |x|<1\\ 0, & |x|>1\end{cases}$.

b) Find the inverse Fourier sine transform of $\frac{e^{-as}}{s}$. [5+5]

6.a) If $y_{20}=24, y_{24}=32, y_{28}=35, y_{32}=40$, find y_{25} using Gauss forward difference formula.

b) Use Lagrange's interpolation formula to find a polynomial of least degree which suits the following data: [5+5]

x:	0	1	3	4
y:	5	6	50	105

OR

7.a) Fit a polynomial of second degree to the following data by the method of least squares:

x:	0	1	2
y:	1	6	17

b) Fit a curve of the form $y=ae^{bx}$ for the following data: [5+5]

x:	1	2	3	4
y:	1.65	2.70	4.50	7.35

8.a) Find a root of the equation $e^x-x=2$ using bisection method correct to 3 decimal Places.

b) Compute $\sqrt{10}$ using Newton-Raphson method correct to 3 decimal places. [5+5]

OR

9. Solve the system of equations $10x+y+z=12, 2x+10y+z=13, 2x+2y+10z=14$ by Jacobi's iteration method and Gauss-Seidel iteration method. [10]

10.a) Evaluate $\int_0^1 \frac{dx}{1+x^2}$ using Trapezoidal rule with $h=\frac{1}{6}$.

b) Apply shooting method to solve the boundary value problem
$y''-6y^2=0,\ y(0)=1,\ y(0.5)=0.44$. [5+5]

OR

11.a) Given that $\frac{dy}{dx}=2+\sqrt{xy},\ y(1)=1$. Find approximate value of y at $x=2$ using Euler's modified method.

b) Find the largest eigen vector and the corresponding Eigen value of the matrix $A=\begin{pmatrix}1 & 3 & -1\\ 3 & 2 & 4\\ -1 & 4 & 10\end{pmatrix}$ by power method. [5+5]

---ooOoo---

Code No: 124CQ

R15

JAWAHARLAL NEHRU TECHNOLOGICAL UNIVERSITY HYDERABAD

B.Tech II Year II Semester Examinations, May - 2017

DATABASE MANAGEMENT SYSTEMS

(Common to CSE, IT)

Time: 3 Hours **Max. Marks: 75**

Note: This question paper contains two parts A and B.
Part A is compulsory which carries 25 marks. Answer all questions in Part A. Part B consists of 5 Units. Answer any one full question from each unit. Each question carries 10 marks and may have a, b, c as sub-questions.

PART - A

(25 Marks)

1.a) What is DBMS? What are the goals of DBMS? [2]
b) Explain about DDL and DML languages. [3]
c) Explain views in SQL language. [2]
d) Explain domain relational calculus. [3]
e) Define loss less join decomposition with example. [2]
f) What is the difference between 3NF and BCNF? [3]
g) What is locking Protocol? [2]
h) When are two schedules conflict equivalent? What is conflict serializable schedule? [3]
i) Why are tree-structure indexes are good for searches, especially range selections. [2]
j) What is the main difference between ISAM and B+ tree indexes? [3]

PART-B

(50 Marks)

2.a) What are the main components in a DBMS and briefly explain what they do.
b) Explain the following:
i) View of Data ii) Data Abstraction iii) Instances and Schemas. [5+5]

OR

3.a) Develop ER-Diagram for a hospital with a set of patients and a set of medical doctors. Associated with each patient a log of the various tests and examinations conducted.
b) What is relation? Differentiate between a relation schema and relation instance define the term arity and degree of a relation? What are domain constraints? [5+5]

4.a) Explain the fundamental operations in relational algebra with examples.
b) Explain the following Operators in SQL with examples:
i) SOME ii) IN iii) EXCEPT iv) EXISTS [5+5]

OR

5.a) Let R=(ABC) and S=(DEF) let r(R) and s(S) both relations on schema R and S. Give an expression in the Tuple relational calculus that is equivalent to each of the following.
i) $\sigma_{B=19}(r)$ ii) $\prod_{A,F,}(\sigma_{C=D}(r \times s))$ iii) $r \cap s$
b) What are integrity constraints? Define the terms primary key constrains and foreign key constraints. How are these expressed in SQL? [5+5]

6.a) What is normalization? What are the conditions are required for a relation to be in 2NF, 3NF and BCNF explain with examples.

b) Compute the closer of the following set of functional dependencies for a relation scheme. R(A,B,C,D,E) F={A→BC, CD→E, B→D,E→A}
List out the candidate keys of R. [5+5]

OR

7.a) What are the conditions are required for a relation to be in 4NF and 3NF explain with examples.

b) Compute the closer of the following set of functional dependencies for a relation scheme. R(A,B,C,D,E,F,G,H), F={ AB→C, BD→EF, AD→G,A→H}
List the candidate keys of R. [5+5]

8.a) What is transaction? Explain the ACID Properties of transactions.

b) Explain the Check point log based recovery scheme for recovering the database. [5+5]

OR

9.a) Describe the steps in crash recovery in ARIES.

b) Explain the *Time Stamp - Based Concurrency* Control protocol. [5+5]

10.a) Explain Deletion and insertion operations in ISAM with examples.

b) How does *Extendable hashing* use a directory of buckets? How does it handles insert and delete operations. [5+5]

OR

11.a) Explain how insert and delete operations are handled in a static hash index.

b) Explain deletion and insertion operation in *B+ trees*. [5+5]

---ooOoo---

Code No: 114AA

R13

JAWAHARLAL NEHRU TECHNOLOGICAL UNIVERSITY HYDERABAD
B.Tech II Year II Semester Examinations, May - 2017
HYDRAULICS AND HYDRAULIC MACHINERY
(Civil Engineering)

Time: 3 Hours **Max. Marks: 75**

Note: This question paper contains two parts A and B.
Part A is compulsory which carries 25 marks. Answer all questions in Part A.
Part B consists of 5 Units. Answer any one full question from each unit.
Each question carries 10 marks and may have a, b, c as sub questions.

PART- A **(25 Marks)**

1.a) Differentiate between subcritical flow and supercritical flow. [2]
b) What is hydraulic jump? [3]
c) State Rayleigh's method of dimension analysis. [2]
d) What are geometric, kinematic and dynamic similarities? [3]
e) State the principle of Angular momentum. [2]
f) Explain Hydraulic efficiency, mechanical efficiency and overall efficiency. [3]
g) Explain about surge tank in turbines. [2]
h) Define specific speed of turbine. [3]
i) Differentiate between single stage and multi stage pump. [2]
j) Define utilization factor and capacity factor. [3]

PART-B **(50 Marks)**

2.a) Derive expression for kinetic energy correction factor.
b) Velocity distribution in an open rectangular channel is given by $V=3y^{1/2}$. If the width of the channel is 10 m and the depth of flow is 1m, find the average velocity of the cross section, energy correction factor and momentum correction factor. [5+5]

OR

3.a) Define hydraulic jump. Explain various types of hydraulic jump. Derive the head loss in hydraulic jump.
b) A gate is to be suddenly dropped into a place closing a rectangular channel 2 m deep and 3 m wide in which 6 cumec of water is flowing at a depth of 1.2 m. Will the water spill over the sides? What will be the velocity and height of surge produced? [5+5]

4.a) Explain about different types of forces acting in moving fluid.
b) The pressure difference Δp in a pipe of diameter D and length due to turbulent flow depends on the velocity V, viscosity μ, density ρ and roughness k. Using Buckingham's π-theorem, obtain expression for Δp. [5+5]

OR

5.a) What are different types of dimensionless numbers and explain them?
b) A ship model of scale 1/50 is towed through sea water at a speed of 1 m/s. A force of 2 N is required to tow the model. Determine the speed of ship and propulsive force on the ship, if the prototype is subjected to wave resistance only. [5+5]

6.a) Show that the force exerted by a jet of water on an inclined fixed plate in the direction of the jet is given by $F_x=\rho\, aV^2\, \sin^2\theta$, where a = Area of the jet, V = velocity of the jet and θ = inclination of the plate with the jet.

b) A jet of water having a velocity of 20 m/sec strikes a curved vane which is moving with a velocity of 9 m/sec. The vane is symmetrical and is so shaped that the jet is deflected through 120 degrees. Find the angle of the jet at inlet of the vane if there is no shock. What is the absolute velocity of the jet at outlet in magnitude and direction and the work done per second per unit weight of water strikings. Assume the vane to be smooth. [5+5]

OR

7.a) Prove that the force exerted by a jet of water on a fixed semi-circular plate in the direction of the jet when the jet strikes at the centre of the semi-circular plate is two times the force exerted by the jet on an fixed vertical plane.

b) A jet of water of 10 cm diameter is discharging under a constant head of 80 m. Find the force exerted by the jet on a fixed plate. Take coefficient of velocity as 0.9. [5+5]

8.a) What are the uses of a draft tube? Describe with neat sketches different types of draft tubes.

b) A turbine develops 7355 kW under a head of 24.7 m at 210 rpm. What is its specific speed? Indicate the type of turbine suitable for this purpose. If this turbine is tested in the laboratory where the head of water available is only 7.5 m, what power will it develop at what speed? [5+5]

OR

9.a) Define the term unit power, unit speed and unit discharge with reference to a hydraulic turbine. And also derive the expression for these terms.

b) A turbine develops 9000 kW when running at a speed of 140 rpm and under a head of 30 m. Determine the specific speed of the turbine. [5+5]

10.a) Define cavitation. What are the effects of cavitation? Give the necessary precaution against the cavitation.

b) The diameter of an impeller of a centrifugal pump at inlet and outlet are 300 mm and 600 mm respectively. The velocity of flow at outlet is 2.5 m/sec and vanes are set back at an angle of 45 degrees at outlet. Determine the minimum starting speed of the pump if the manometer efficiency is 75%. [5+5]

OR

11.a) What are the various applications of Hydroelectric power plant.

b) A centrifugal pump rotating at 1000 rpm delivers 160 liters/s of water against a head of 30 m. The pump is installed at a place where atmospheric pressure is 1×10^5 P_a(abs.) and vapour pressure of water is 2 kP_a (abs.). The head loss in suction pipe is equivalent to 0.2 m of water. Calculate minimum NPSH. [5+5]

---ooOoo---

R13

Code No: 114AC

JAWAHARLAL NEHRU TECHNOLOGICAL UNIVERSITY HYDERABAD
B.Tech II Year II Semester Examinations, May - 2017
NETWORK THEORY
(Electrical and Electronics Engineering)

Time: 3 Hours **Max. Marks: 75**

Note: This question paper contains two parts A and B.
Part A is compulsory which carries 25 marks. Answer all questions in Part A. Part B consists of 5 Units. Answer any one full question from each unit. Each question carries 10 marks and may have a, b, c as sub questions.

PART- A

(25 Marks)

1.a) Define phase sequence. [2]
b) List the advantages of three phase system over a single phase system. [3]
c) Explain about Steady state or forced response [2]
d) How do you interpretate time constant in transient analysis. [3]
e) Why y-parameters are called as short circuit parameters? [2]
f) Write the condition of reciprocity and symmetry interms of h-parameters. [3]
g) How do you distinguish a Unbalanced and balanced symmetrical T- section. [2]
h) How do you define Voltage and current transfer ratio? [3]
i) What do you understand by complex frequency and its usage? [2]
j) Explain the condition for even function symmetry. [3]

PART-B

(50 Marks)

2.a) How do you measure the active, reactive power and power factor of a balanced three phase load using two wattmeter method?
b) Derive the relationship between line and phase voltages and currents in a star connection. [5+5]

OR

3. A delta connected load has a parallel combination of resistance 5Ω and capacitive reactance –j5Ω in each phase. If a balanced three phase 400V supply is applied between lines, find the phase currents and line currents and draw the phasor diagram. [10]

4. For the following figure 1, the switch is closed at position1at t=0. At t=0.5 m Sec, the switch is moved to position 2. Find the expression for the current in both the condition and Sketch the transient current. [10]

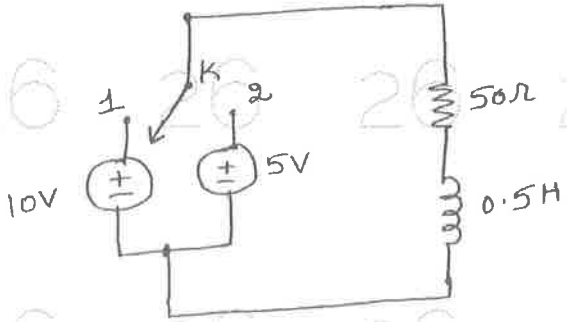

Figure: 1

OR

5. Explain the transient response in time domain with constant DC excitation as input for a RC circuit. Draw the voltage waveform across R and C. [10]

6.a) List the necessary conditions for transfer functions.

b) Find the pole zero locations of the current transfer ratio I_2 / I_1 in s- domain for circuit shown in figure 2. [5+5]

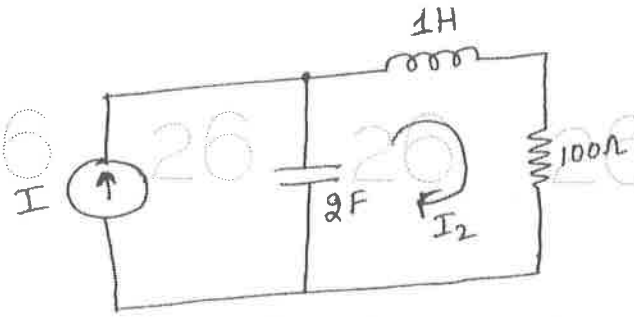

Figure: 2

OR

7. For the network shown below figure 3, 'S' is switched on at t=0. Find the driving point impedance and the source current in s- domain. [10]

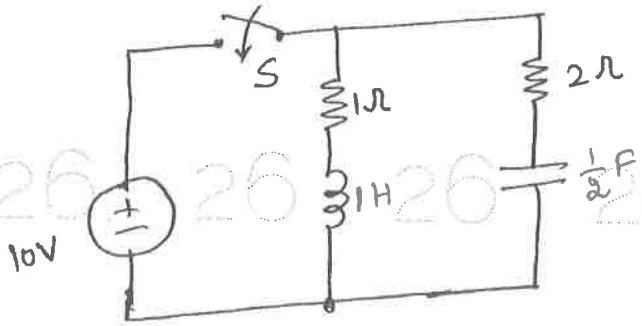

Figure: 3

8.a) Derive the condition for Reciprocity and symmetry in a two port Z - parameter representation.

b) The Z-parameters of a circuit are given by

$$Z_{11} = 4;\ Z_{12} = 1;\ Z_{21} = 3;\ Z_{22} = 3$$

Obtain the transmission parameters. [5+5]

OR

9. Determine the Z-parameters for the network shown in figure 4. [10]

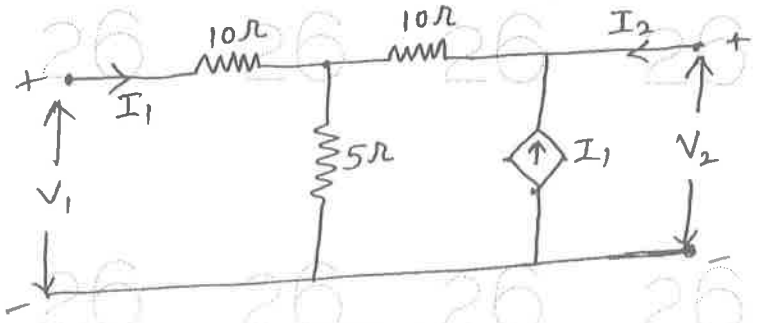

Figure: 4

10.a) Explain in detail about the exponential form of a Fourier Series.

b) List the properties of Fourier transform. [5+5]

OR

11.a) Find a and b coefficients of Fourier series for the following given waveform shown in figure 5.

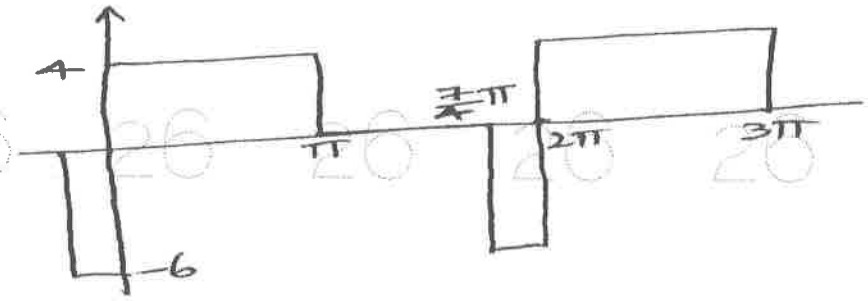

Figure: 5

b) Explain the design procedure of constant 'K' high pass filter. [6+4]

---ooOoo---

Code No: 114DD

R13

JAWAHARLAL NEHRU TECHNOLOGICAL UNIVERSITY HYDERABAD
B.Tech II Year II Semester Examinations, May - 2017
MATHEMATICS – II
(Common to ME, MCT, MIE, MSNT)

Time: 3 Hours **Max. Marks: 75**

Note: This question paper contains two parts A and B.
Part A is compulsory which carries 25 marks. Answer all questions in Part A. Part B consists of 5 Units. Answer any one full question from each unit. Each question carries 10 marks and may have a, b, c as sub questions.

PART- A

(25 Marks)

1.a) Show that $\nabla r^n = nr^{n-2}\vec{r}$, where $\vec{r} = x\hat{i} + y\hat{j} + z\hat{k}$ and $r = |\vec{r}|$. [2]

b) Find the values of a, b, c so that
$\vec{F} = (x + 2y + az)\hat{i} + (bx - 3y - z)\hat{j} + (4x + cy + 2z)\hat{k}$ is irrotational. [3]

c) What are Dirichlet's conditions for the existence of Fourier series? [2]

d) Find the Fourier transform of $f(x) = e^{-|x|}$. [3]

e) Construct the forward difference table from the following data: [2]

x:	0	10	20	30
y:	0	0.174	0.347	0.518

f) Obtain the normal equations for fitting a straight line $y = ax + b$ to the data (x_i, y_i), $i = 1, 2, \ldots\ldots\ldots n$. [3]

g) If the first two approximations x_3 and x_4 for the root of $x^3 - 3x - 4 = 0$ are 2.125 and -3 respectively, find x_5 by the method of false position. [2]

h) Find the LU decomposition for the matrix $A = \begin{pmatrix} 2 & 3 \\ 1 & 2 \end{pmatrix}$. [3]

i) Approximate $\int_0^{\pi} \sin x\,dx$ using the 2-point Gauss-Legendre formula. [2]

j) Evaluate $\int_0^1 \frac{dx}{x}$ using Simpson's $\frac{1}{3}$ rule with $h = \frac{1}{4}$. [3]

PART-B

(50 Marks)

2.a) Find the values of a and b so that the surfaces $ax^2 - byz = (a+2)x$ and $4x^2y + z^3 = 4$ intersect orthogonally at the point (1,-1,2).

b) Prove that $\nabla \times (\nabla \times \vec{F}) = \nabla(\nabla \cdot \vec{F}) - \nabla^2 \vec{F}$. [5+5]

OR

3.a) Find the work done by the force $\vec{F}=\left(3x^2-6yz\right)\hat{i}+\left(2y+3xz\right)\hat{j}+\left(1-4xyz^2\right)\hat{k}$ in moving a particle from (0, 0, 0) to (1, 1, 1) along the curve $C: x=t, y=t^2, z=t^3$.

b) Use Green's theorem to evaluate $\oint_c\left(2xy-x^2\right)dx+\left(x^2+y^2\right)dy$, where c is the boundary of the region enclosed by $y=x^2$ and $y^2=x$. [5+5]

4. Find the Fourier series expansion of the function

$f(x)=\begin{cases}2+x, & -2\le x\le 0\\ 2-x, & 0<x\le 2\end{cases}$, $f(x+4)=f(x)$. Hence show that $\frac{1}{1^2}+\frac{1}{3^2}+\frac{1}{5^2}+\ldots\ldots=\frac{\pi^2}{8}$. [10]

OR

5.a) Find the Fourier integral representation of $f(x)=\begin{cases}x, & |x|<1\\ 0, & |x|>1\end{cases}$.

b) Find the inverse Fourier sine transform of $\frac{e^{-as}}{s}$. [5+5]

6.a) If $y_{20}=24, y_{24}=32, y_{28}=35, y_{32}=40$, find y_{25} using Gauss forward difference formula.

b) Use Lagrange's interpolation formula to find a polynomial of least degree which suits the following data: [5+5]

x:	0	1	3	4
y:	5	6	50	105

OR

7.a) Fit a polynomial of second degree to the following data by the method of least squares:

x:	0	1	2
y:	1	6	17

b) Fit a curve of the form $y=ae^{bx}$ for the following data: [5+5]

x:	1	2	3	4
y:	1.65	2.70	4.50	7.35

8.a) Find a root of the equation $e^x-x=2$ using bisection method correct to 3 decimal Places.

b) Compute $\sqrt{10}$ using Newton-Raphson method correct to 3 decimal places. [5+5]

OR

9. Solve the system of equations $10x+y+z=12, 2x+10y+z=13, 2x+2y+10z=14$ by Jacobi's iteration method and Gauss-Seidel iteration method. [10]

10.a) Evaluate $\int_0^1 \frac{dx}{1+x^2}$ using Trapezoidal rule with $h=\frac{1}{6}$.

b) Apply shooting method to solve the boundary value problem

$y''-6y^2=0,\ y(0)=1,\ y(0.5)=0.44$. [5+5]

OR

11.a) Given that $\frac{dy}{dx}=2+\sqrt{xy}$, $y(1)=1$. Find approximate value of y at $x=2$ using Euler's modified method.

b) Find the largest eigen vector and the corresponding Eigen value of the matrix $A=\begin{pmatrix}1 & 3 & -1\\ 3 & 2 & 4\\ -1 & 4 & 10\end{pmatrix}$ by power method. [5+5]

---ooOoo---

Code No: 114CQ **R13**

JAWAHARLAL NEHRU TECHNOLOGICAL UNIVERSITY HYDERABAD
B.Tech II Year II Semester Examinations, May - 2017
DATABASE MANAGEMENT SYSTEMS
(Common to CSE, IT)

Time: 3 Hours **Max. Marks: 75**

Note: This question paper contains two parts A and B.
Part A is compulsory which carries 25 marks. Answer all questions in Part A. Part B consists of 5 Units. Answer any one full question from each unit. Each question carries 10 marks and may have a, b, c as sub questions.

PART - A

(25 Marks)

1.a) What is DBMS? What are the goals of DBMS? [2]
b) Explain about DDL and DML languages. [3]
c) Explain views in SQL language. [2]
d) Explain domain relational calculus. [3]
e) Define loss less join decomposition with example. [2]
f) What is the difference between 3NF and BCNF? [3]
g) What is locking Protocol? [2]
h) When are two schedules conflict equivalent? What is conflict serializable schedule? [3]
i) Why are tree-structure indexes are good for searches, especially range selections. [2]
j) What is the main difference between ISAM and B+ tree indexes? [3]

PART-B

(50 Marks)

2.a) What are the main components in a DBMS and briefly explain what they do.
b) Explain the following:
i) View of Data ii) Data Abstraction iii) Instances and Schemas. [5+5]

OR

3.a) Develop ER-Diagram for a hospital with a set of patients and a set of medical doctors. Associated with each patient a log of the various tests and examinations conducted.
b) What is relation? Differentiate between a relation schema and relation instance define the term arity and degree of a relation? What are domain constraints? [5+5]

4.a) Explain the fundamental operations in relational algebra with examples.
b) Explain the following Operators in SQL with examples:
i) SOME ii) IN iii) EXCEPT iv) EXISTS [5+5]

OR

5.a) Let R=(ABC) and S=(DEF) let r(R) and s(S) both relations on schema R and S. Give an expression in the Tuple relational calculus that is equivalent to each of the following.
i) $\sigma_{B=19}(r)$ ii) $\prod_{A,F}(\sigma_{C=D}(r \times s))$ iii) $r \cap s$
b) What are integrity constraints? Define the terms primary key constrains and foreign key constraints. How are these expressed in SQL? [5+5]

6.a) What is normalization? What are the conditions are required for a relation to be in 2NF, 3NF and BCNF explain with examples.

b) Compute the closer of the following set of functional dependencies for a relation scheme. R(A,B,C,D,E) F={A→BC, CD→E, B→D,E→A}
List out the candidate keys of R. [5+5]

OR

7.a) What are the conditions are required for a relation to be in 4NF and 3NF explain with examples.

b) Compute the closer of the following set of functional dependencies for a relation scheme. R(A,B,C,D,E,F,G,H), F={ AB→C, BD→EF, AD→G,A→H}
List the candidate keys of R. [5+5]

8.a) What is transaction? Explain the ACID Properties of transactions.

b) Explain the Check point log based recovery scheme for recovering the database. [5+5]

OR

9.a) Describe the steps in crash recovery in ARIES.

b) Explain the *Time Stamp - Based Concurrency* Control protocol. [5+5]

10.a) Explain Deletion and insertion operations in ISAM with examples.

b) How does *Extendable hashing* use a directory of buckets? How does it handles insert and delete operations. [5+5]

OR

11.a) Explain how insert and delete operations are handled in a static hash index.

b) Explain deletion and insertion operation in *B+ trees*. [5+5]

---ooOoo---

Code No: 54009 **R09**

JAWAHARLAL NEHRU TECHNOLOGICAL UNIVERSITY HYDERABAD
B.Tech II Year II Semester Examinations, May - 2017
ELECTRONIC CIRCUITS
(Electrical and Electronics Engineering)

Time: 3 hours **Max. Marks: 75**

Answer any five questions
All questions carry equal marks

1.a) Draw a circuit diagram for a CE transistor amplifier and derive expressions for voltage and current gain and input and output impedance.
b) What are input and output nonlinear distortions? Explain and give the effect on the output signal of an amplifier. [10+5]

2.a) Sketch a typical frequency response curve of an amplifier and identify the bandwidth.
b) Discuss the role of Miller effect capacitance on frequency response. [8+7]

3.a) An amplifier consists of three identical stages connected in series. The output voltage is sampled and returned to the input in series opposing. If it is specified that the relative change dA_f/A_f in the closed loop voltage gain A_f must not exceed Ψ_f. Show that the minimum value of the open loop gain A of the amplifier is given by $A = 3A_f \frac{|\Psi_1|}{|\Psi_f|}$, where $\Psi_1 = \frac{dA_1}{A_1}$ is the relative change in the voltage gain of each stage of the amplifier.
b) Derive an expression for the input and output impedance with feedback of current shunt feedback amplifier. [7+8]

4.a) Derive an expression for frequency of oscillation of a RC phase shift oscillator using a BJT transistor.
b) In a Colpitts oscillator C_1=0.2μF and C_2 = 0.04μF. If the frequency of oscillation is 10 kHz, find the value of Inductor. Also, find the required gain for oscillation? [10+5]

5.a) For a Class B amplifier with Vcc=25V, driving an 8Ω load, determine maximum output power, maximum input power and maximum circuit efficiency.
b) Discuss how the efficiency of the class A power amplifier is improved by the transformer coupled amplifier configuration? [7+8]

6.a) Derive an expression for the percentage tilt of the output of a high pass circuit by large time constant, excited by a symmetrical square wave with zero average value.
b) Explain the working of Ringing circuit with neat diagrams. [8+7]

7.a) Compare a regenerative and non-regenerative comparator with suitable examples.
b) State and prove Clamping theorem. Write its applications. [8+7]

8.a) Define all the switching times of transistor as a switch and draw its switching characteristics.
b) Draw the circuit diagram of Schmitt trigger and explain how hysteresis loop is obtained and also derive the equations for LTP and UTP. [7+8]

---ooOoo---

Code No: 54016 **R09**

JAWAHARLAL NEHRU TECHNOLOGICAL UNIVERSITY HYDERABAD
B.Tech II Year II Semester Examinations, May - 2017
DESIGN AND ANALYSIS OF ALGORITHMS
(Common to CSE, IT)

Time: 3 hours **Max. Marks: 75**

Answer any five questions
All questions carry equal marks

1.a) Write about amortized and probabilistic analysis and also differentiate between average case analysis, probabilistic and amortized analysis.
b) Write the process for design and analysis of algorithm. [8+7]

2.a) Write and explain UNION and FIND algorithms.
b) What is articulation point and explain with suitable example. [7+8]

3.a) Explain iterative binary search algorithm.
b) Sort the list of numbers using merge sort: 78, 32, 42, 62, 98, 12, 34, 83. [7+8]

4.a) Consider the following instances of the knapsack problem. Find optimal solution For:
i) Maximum profit ii) Minimum weight iii) Max. Profit per unit weight.
M=20;n=5;(P_1,P_2,P_3,P_4,P_5)=(25,20,15,10,5) and (W_2,W_3,W_4,W_5)=(18,15,12,10,8).
b) Explain the Prim's algorithm to find the min cost spanning tree with an example. [8+7]

5. Develop an algorithm for matrix chain multiplication and explain how to determine the sequence of multiplication that will take less number of scalar multiplications for the given matrices with their orders. $A_{5\times13}$ $B_{13\times8}$ $C_{8\times10}$ $D_{10\times5}$. [15]

6.a) Identify Hamiltonian cycle from the following graph.

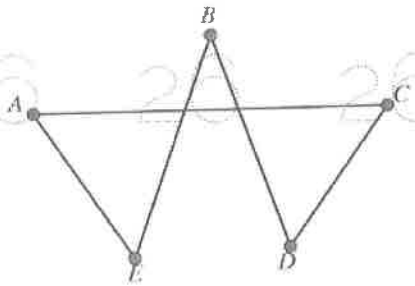

b) Sketch the state space tree generated by 4 queen's problem. [8+7]

7. Draw the portion of state space tree generated by FIFO knapsack for the instance N = 4 , (P_1, P_2, P_3, P_4)= (10, 10, 12, 18) , (w_1, w_2, w_3, w_4) = (2, 4, 6, 9) , m =15. [15]

8.a) Prove circuit-SAT is in NP.
b) List two problems that have polynomial time algorithms. Justify your answer.
c) Explain chromatic number decision problem and clique decision problem.[5+5+5]

---ooOoo---

Code No: 54017

R09

JAWAHARLAL NEHRU TECHNOLOGICAL UNIVERSITY HYDERABAD
B.Tech II Year II Semester Examinations, May - 2017
MACHINE DRAWING
(Common to ME, AME)

Time: 3 hours **Max. Marks: 75**

Answer any TWO questions from Part-A
Part-B is Compulsory

PART-A

(15 × 2=30 Marks)

1. Draw the three views of a lifting eye bolt with 25mm diameter. [15]

2. Draw the sectional front view, top view of double riveted zig-zag lap joint to join plates of thickness 30mm. [15]

3. Draw the sectional front, top and side view of a knuckle joint to join two pipes of diameter 35mm each. [15]

PART-B

(45 Marks)

4. Draw the elevation, top view and side view of the assembly of the part drawings given for a stop valve. All dimensions are in mm. [45]

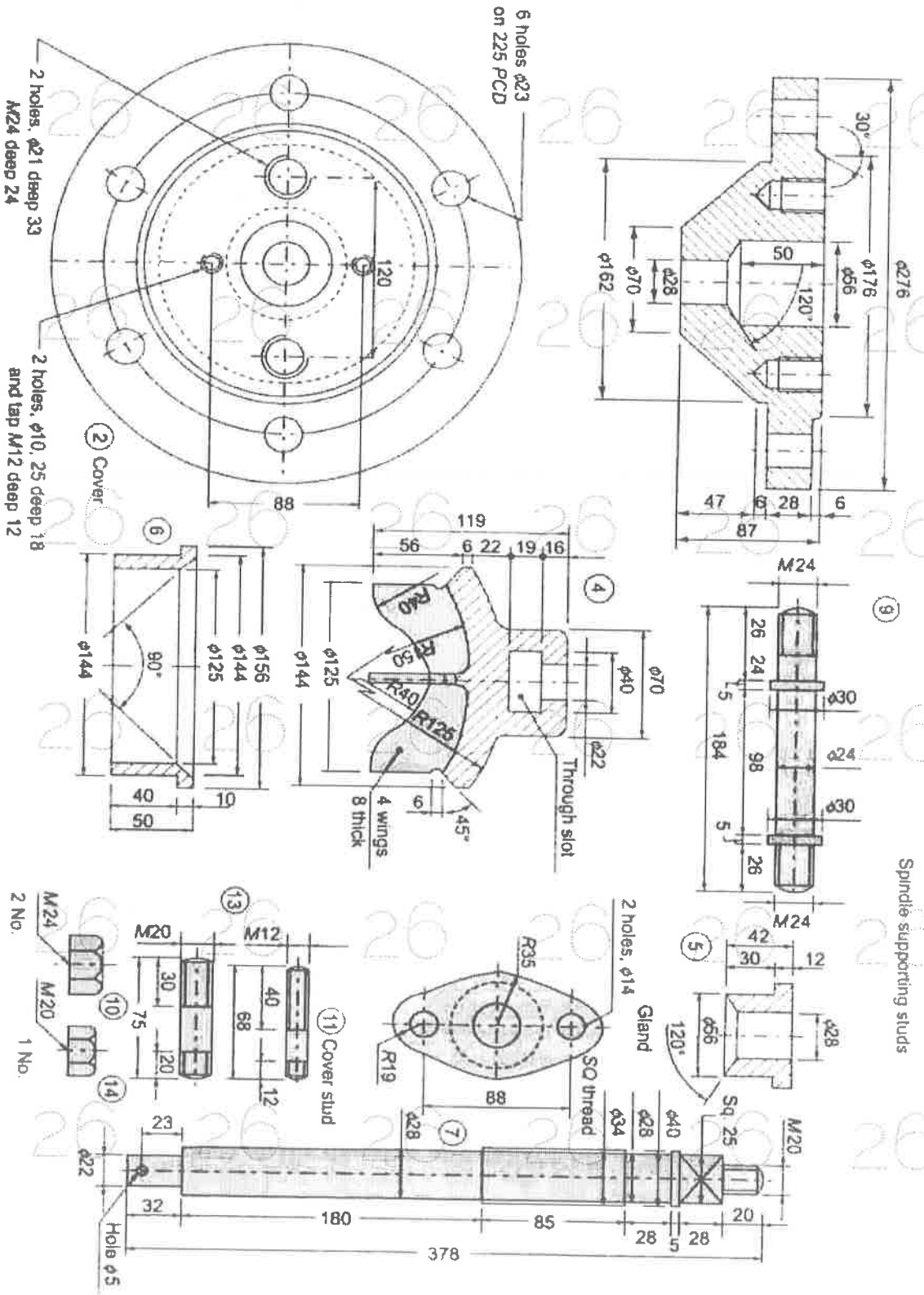
6 holes ϕ23 on 225 PCD
2 holes, ϕ21 deep 33 M24 deep 24
2 holes, ϕ10, 25 deep 18 and tap M12 deep 12
2 Cover
Through slot
4 wings 8 thick
Spindle supporting studs
2 No.
1 No.
Cover stud
2 holes, ϕ14
Gland
SQ thread
Hole ϕ5
Sq. 25

---ooOoo---

Code No: T0222 **R07**

JAWAHARLAL NEHRU TECHNOLOGICAL UNIVERSITY HYDERABAD
B.Tech II Year II Semester Examinations, May - 2017
ELECTRICAL MACHINES – II
(Electrical and Electronics Engineering)

Time: 3 hours **Max. Marks: 80**

Answer any five questions
All questions carry equal marks

1.a) Explain the construction of transformer and materials used for the manufacturing of various parts.
b) The primary winding of 50Hz single phase transformer has 480 turns and is fed from 6400V supply. The secondary winding has 20 urns. Find the peak value of flux in the core and secondary voltage? [8+8]

2.a) Explain the exact equivalent circuit of transformer and using which how approximate equivalent circuit is derived.
b) What is all day efficiency? How can it be calculated in a transformer? [8+8]

3. Discuss the procedure to conduct OC and SC tests on transformer with the help of connection diagram. [16]

4.a) Draw the physical connection and phasor diagram of Δ/Δ and Y/Y connections.
b) What do you understand by on-load and off-load tap changing of transformers? [8+8]

5.a) Derive the expression of slip at maximum torque and maximum torque expressions.
b) A 440V, 50Hz Squirrel cage induction motor has a ratio of standstill reactance of rotor per phase of 3 to 1 and a maximum torque which is 4 times the normal full load torque. Calculate i) Full load slip ii) Ratio of starting torque to full load torque. [8+8]

6.a) Draw and explain the phasor diagram of induction motor at full load and slip of 'S'.
b) A 3-Phase, 4-pole, 1440 rpm, 50Hz induction motor has star connected rotor winding having a resistance of 0.2Ω/phase and a stand still leakage reactance of 1Ω per phase when rated voltage and frequency is applied to stator, rotor induced voltage is 100V/phase. Calculate the rotor current, power factor at full load? [8+8]

7.a) Explain star delta starting method of induction motor with a neat circuit diagram.
b) How do you estimate the performance of 3-ϕ I.M form circle diagram? [8+8]

8. Discuss different speed control techniques of induction motor. [16]

---ooOoo---

R15

Code No: 124CW

JAWAHARLAL NEHRU TECHNOLOGICAL UNIVERSITY HYDERABAD

B.Tech II Year II Semester Examinations, May - 2017

ENVIRONMENTAL STUDIES

(Common to CE, ECE, CSE, EIE, IT, MCT, ETM, MMT, PTM, CEE, AME)

Time: 3 Hours **Max. Marks: 75**

Note: This question paper contains two parts A and B.
Part A is compulsory which carries 25 marks. Answer all questions in Part A.
Part B consists of 5 Units. Answer any one full question from each unit.
Each question carries 10 marks and may have a, b, c as sub questions.

PART- A

(25 Marks)

1.a) Write the significance of biogeochemical cycle in pollution abatement. [2]
b) Differentiate between terrestrial ecosystem and aquatic ecosystem. [3]
c) What are the environmental effects of mineral extraction? [2]
d) Summarize the major reasons for deforestation. List the ill effects of deforestation. [3]
e) What is meant by species diversity? [2]
f) Write the methodology involved in ex-situ and in-situ conservation of a species. [3]
g) Identify the sources of noise pollution in rural areas. List out the health hazards of noise pollution. [2]
h) What are the ambient air quality standards prescribed by central pollution control board in India? [3]
i) How crazy consumerism affects the environment? [2]
j) What are the salient features of wildlife protection act? [3]

PART-B

(50 Marks)

2. Describe the components that make up the structural aspects and functional aspects of an ecosystem. [10]

OR

3. Explain the mechanism involved in the energy flow between various components of an ecosystem. [10]

4.a) Describe the measures to be taken for the better management of available drinking water resources.
b) Discuss the environmental impacts of building the water reservoirs and dams. [5+5]

OR

5. Explain the sources, commercial applications and limitations of biomass energy. [10]

6.a) Enumerate the reasons and need for: genetic diversity and ecosystem diversity.
b) How the loss of biodiversity contributes to global climatic changes? [7+3]

OR

7.a) Explain the ten major Biogeographic zones situated in India.
b) With examples, discuss the social values of biodiversity. [7+3]

8. Describe the mechanism of polluting the soil by: excess use of fertilizer, pesticides and excess salts. [10]

OR

9. Explain the sources and ill effects of ozone layer depletion. Suggest few methods to reduce the effect due to depleting ozone layer. [10]

10.a) Describe the sources and environmental impacts of municipal solid waste.
b) What are hazardous solid wastes? Give examples. [7+3]

OR

11. Explain the characteristics, structure, stages and techniques used for Environmental Impact Assessment (EIA). [10]

---ooOoo---

Code No: 124AE

R15

JAWAHARLAL NEHRU TECHNOLOGICAL UNIVERSITY HYDERABAD

B.Tech II Year II Semester Examinations, May - 2017

ELECTRONIC CIRCUITS

(Electrical and Electronics Engineering)

Time: 3 Hours **Max. Marks: 75**

Note: This question paper contains two parts A and B.
Part A is compulsory which carries 25 marks. Answer all questions in Part A.
Part B consists of 5 Units. Answer any one full question from each unit.
Each question carries 10 marks and may have a, b, c as sub questions.

PART- A

(25 Marks)

1.a) Which configuration in BJT provides the Current gain? [2]
b) How amplifiers are classified according to the type of transistor configuration? [3]
c) What the term f_β indicates at high frequency? [2]
d) What is Frequency Distortion? [3]
e) Distinguish between comparators and clipping circuits. [2]
f) What are the applications of Schmitt trigger? [3]
g) Explain the operation of Heat sinks. [2]
h) Why RC circuits are commonly used compared to RL circuits? [3]
i) How does diode acts as a switch? [2]
j) Name the technologies which use bipolar transistors. [3]

PART-B

(50 Marks)

2. Draw the circuit of an emitter follower, and derive the expressions for A_I, A_V, R_I, R_O in terms of CE parameters. [10]

OR

3. Determine the effect of negative feedback on the input and output impedances of a Voltage-Series feedback amplifier. Show the circuit schematic diagram. [10]

4.a) Draw the ideal and actual frequency response curves of single stage amplifiers.
b) Write a short note on Design of High frequency Amplifiers. [5+5]

OR

5.a) Draw and explain the FET high frequency model.
b) Write a short note on Low frequency response of BJT amplifiers. [5+5]

6.a) With help of neat circuit diagram and waveforms, explain the working of a collector coupled Monostable multivibrator.
b) Why commutating capacitors are used in Multivibrators? [7+3]

OR

7.a) Draw a circuit using diodes to transmit that part of a sine wave which lies between -4V and -7V.
b) With the help of a neat diagram, explain the working of an emitter-coupled clipper. [5+5]

8.a) Explain the high pass RC circuit response for sinusoidal input and derive expression for cut-off frequency.

b) Discuss the concept of Thermal Runway. [6+4]

OR

9. Draw the circuit diagram of Class-B Complementary Push-Pull Amplifier and explain its working and derive the expression for maximum conversion efficiency. [10]

10.a) Explain the operation of transistor switch in saturation.

b) Write a short note on piecewise linear diode characteristics. [5+5]

OR

11.a) Explain the Break down voltage consideration of transistor.

b) Discuss about saturation parameters of Transistor and their variation with temperature. [5+5]

---ooOoo---

R15

Code No: 124DF

JAWAHARLAL NEHRU TECHNOLOGICAL UNIVERSITY HYDERABAD

B.Tech II Year II Semester Examinations, May - 2017

MECHANICS OF FLUIDS AND HYDRAULIC MACHINES

(Common to ME, MIE, MSNT)

Time: 3 Hours **Max. Marks: 75**

Note: This question paper contains two parts A and B.
Part A is compulsory which carries 25 marks. Answer all questions in Part A.
Part B consists of 5 Units. Answer any one full question from each unit.
Each question carries 10 marks and may have a, b, c as sub questions.

PART- A

(25 Marks)

1.a) Mention the advantages of centrifugal pumps. [2]
b) Discuss the importance of priming in pumps. Can priming be avoided in pumps? [3]
c) Define Specific Speed of a Pump. [2]
d) Summarize the classification of turbines. [3]
e) Discuss how you measure the pressure between two different points using differential manometer? [2]
f) Examine critically one Dimensional and three Dimensional flows. [3]
g) Illustrate the measurement velocity using Pitot tube. [2]
h) Discuss the phenomenon of Cavitation in turbines. How do you control the same? [3]
i) How do you measure Pressure on curved surfaces? [2]
j) Explain the characteristics of laminar and turbulent layer. [3]

PART-B

(50 Marks)

2.a) Explain the following terms:
i) Specific weight ii) Vapour pressure iii) atmospheric pressure.
b) A hydraulic lift is used for lifting automobiles has a diameter ram which slides in a 25.018 cm diameter cylinder, the annular space being filled with oil having a kinematic viscosity of 3.7 cm^2/s . Find the frictional resistance when 3.3 m of ram is engaged in the cylinder. [5+5]

OR

3.a) The relative density of a fluid is 1.26 and its dynamic viscosity is 1.5 Pa.s. Calculate its:
i) Specific Weight ii) Kinematic viscosity.
b) A 90 mm diameter shaft rotates at 1200 rpm in a 100 mm long journal bearing of 90.5 mm internal diameter. The annular space in the bearing filled with oil having a dynamic viscosity of 0.12 Pa.s. Estimate the power dissipated as heat. [5+5]

4.a) Explain in detail the classification of flows with examples.
b) Derive the Bernoulli's Energy equation from fundamental principles, Clearly state the assumptions and limitations of the same. [5+5]

OR

5.a) Explain the forces on a 90^0 bend with neat sketch and analyze the same using Momentum Equation.

b) Gasoline which has a vapour pressure of 5.5×10^4 Pa (abs) and density 680 kg/m^3 flows through a constriction in a pipe where the diameter is reduced from 20 cm to 10 cm. The pressure in the 20 cm pipe just upstream of the constriction is 50 k Pa. If the atmospheric pressure is 75 cm of mercury, calculate the maximum discharge that can be passed through this constriction without cavitation occurring. [5+5]

6.a) A pipe carrying water has a 30 cm × 15 cm Venturimeter which is positioned inclined a 30^0 to the horizontal. The flow is upwards. The converging cone is 45 cm in length and the Cd of the meter is 0.98. A differential U-tube manometer with mercury as indicating fluid is connected to the inlet and to the throat and shows a differential column height of 30 cm calculate i) the discharge in the pipe ii) if the pressure in the inlet section is 50 k Pa, determine the pressure at the throat iii) Find the head loss in the converging section of the Venturimeter.

b) Explain the boundary layer characteristics along thin plate, bring out essential important points. [5+5]

OR

7.a) A 30 cm diameter pipe is required for a town's water supply. As pipes of this diameter are not available in the market, it was decided to lay two parallel pipes of equal diameter. Find the diameter of the parallel pipes. Assume f is same for all the pipes.

b) Derive the Darcy Weisbach equation for pipe flow system. [5+5]

8.a) A jet water 75 mm in diameter having velocity of 20 m/s strikes a series of flat plates arranged in around the periphery of a wheel such that each plate appears successively before the jet. If the plates are moving at velocity of 5 m/s. Compute the force exerted by the jet on the plate, the work done per second on the plate and the efficiency of the jet.

b) What is water hammer? Obtain en expression for the rise in pressure in a thin elastic pipe of circular section in which the flow of water is stopped by sudden closure of valve. [5+5]

OR

9.a) Derive the draft tube efficiency formula in case of reaction turbine and state the functions.

b) What do you understand by governing of hydraulic turbines? Also describe with sketches different types of surge tanks. [5+5]

10.a) Define the following in case of Centrifugal pumps i) Manometric efficiency ii) Volumetric efficiency iii) Mechanical efficiency iv) Specific speed.

b) Describe the characteristics curves of pumps with neat diagrams. [5+5]

OR

11.a) Define the term NPSH. Discuss the various provisions required for prevention of cavitation.

b) Explain the functions of air vessels in a reciprocating pump. [5+5]

---ooOoo---

R13

Code No: 114DF

JAWAHARLAL NEHRU TECHNOLOGICAL UNIVERSITY HYDERABAD

B.Tech II Year II Semester Examinations, May - 2017

MECHANICS OF FLUIDS AND HYDRAULIC MACHINES

(Common to ME, MIE, MSNT)

Time: 3 Hours **Max. Marks: 75**

Note: This question paper contains two parts A and B.
Part A is compulsory which carries 25 marks. Answer all questions in Part A.
Part B consists of 5 Units. Answer any one full question from each unit.
Each question carries 10 marks and may have a, b, c as sub questions.

PART- A **(25 Marks)**

1.a) Mention the advantages of centrifugal pumps. [2]
b) Discuss the importance of priming in pumps. Can priming be avoided in pumps? [3]
c) Define Specific Speed of a Pump. [2]
d) Summarize the classification of turbines. [3]
e) Discuss how you measure the pressure between two different points using differential manometer? [2]
f) Examine critically one Dimensional and three Dimensional flows. [3]
g) Illustrate the measurement velocity using Pitot tube. [2]
h) Discuss the phenomenon of Cavitation in turbines. How do you control the same? [3]
i) How do you measure Pressure on curved surfaces? [2]
j) Explain the characteristics of laminar and turbulent layer. [3]

PART-B **(50 Marks)**

2.a) Explain the following terms:
i) Specific weight ii) Vapour pressure iii) atmospheric pressure.
b) A hydraulic lift is used for lifting automobiles has a diameter ram which slides in a 25.018 cm diameter cylinder, the annular space being filled with oil having a kinematic viscosity of 3.7 cm^2/s . Find the frictional resistance when 3.3 m of ram is engaged in the cylinder. [5+5]

OR

3.a) The relative density of a fluid is 1.26 and its dynamic viscosity is 1.5 Pa.s. Calculate its:
i) Specific Weight ii) Kinematic viscosity.
b) A 90 mm diameter shaft rotates at 1200 rpm in a 100 mm long journal bearing of 90.5 mm internal diameter. The annular space in the bearing filled with oil having a dynamic viscosity of 0.12 Pa.s. Estimate the power dissipated as heat. [5+5]

4.a) Explain in detail the classification of flows with examples.
b) Derive the Bernoulli's Energy equation from fundamental principles, Clearly state the assumptions and limitations of the same. [5+5]

OR

5.a) Explain the forces on a 90^0 bend with neat sketch and analyze the same using Momentum Equation.

b) Gasoline which has a vapour pressure of 5.5×10^4 Pa (abs) and density 680 kg/m^3 flows through a constriction in a pipe where the diameter is reduced from 20 cm to 10 cm. The pressure in the 20 cm pipe just upstream of the constriction is 50 k Pa. If the atmospheric pressure is 75 cm of mercury, calculate the maximum discharge that can be passed through this constriction without cavitation occurring. [5+5]

6.a) A pipe carrying water has a 30 cm × 15 cm Venturimeter which is positioned inclined a 30^0 to the horizontal. The flow is upwards. The converging cone is 45 cm in length and the Cd of the meter is 0.98. A differential U-tube manometer with mercury as indicating fluid is connected to the inlet and to the throat and shows a differential column height of 30 cm calculate i) the discharge in the pipe ii) if the pressure in the inlet section is 50 k Pa, determine the pressure at the throat iii) Find the head loss in the converging section of the Venturimeter.

b) Explain the boundary layer characteristics along thin plate, bring out essential important points. [5+5]

OR

7.a) A 30 cm diameter pipe is required for a town's water supply. As pipes of this diameter are not available in the market, it was decided to lay two parallel pipes of equal diameter. Find the diameter of the parallel pipes. Assume f is same for all the pipes. [5+5]

b) Derive the Darcy Weisbach equation for pipe flow system.

8.a) A jet water 75 mm in diameter having velocity of 20 m/s strikes a series of flat plates arranged in around the periphery of a wheel such that each plate appears successively before the jet. If the plates are moving at velocity of 5 m/s. Compute the force exerted by the jet on the plate, the work done per second on the plate and the efficiency of the jet.

b) What is water hammer? Obtain en expression for the rise in pressure in a thin elastic pipe of circular section in which the flow of water is stopped by sudden closure of valve. [5+5]

OR

9.a) Derive the draft tube efficiency formula in case of reaction turbine and state the functions.

b) What do you understand by governing of hydraulic turbines? Also describe with sketches different types of surge tanks. [5+5]

10.a) Define the following in case of Centrifugal pumps i) Manometric efficiency ii) Volumetric efficiency iii) Mechanical efficiency iv) Specific speed.

b) Describe the characteristics curves of pumps with neat diagrams. [5+5]

OR

11.a) Define the term NPSH. Discuss the various provisions required for prevention of cavitation.

b) Explain the functions of air vessels in a reciprocating pump. [5+5]

---ooOoo---

Code No: 114CW

R13

JAWAHARLAL NEHRU TECHNOLOGICAL UNIVERSITY HYDERABAD
B.Tech II Year II Semester Examinations, May - 2017
ENVIRONMENTAL STUDIES
(Common to CE, ECE, CSE, EIE, IT, MCT, MMT, PTM, CEE, AME)

Time: 3 Hours **Max. Marks: 75**

Note: This question paper contains two parts A and B.
Part A is compulsory which carries 25 marks. Answer all questions in Part A.
Part B consists of 5 Units. Answer any one full question from each unit.
Each question carries 10 marks and may have a, b, c as sub questions.

PART- A

(25 Marks)

1.a) Write the significance of biogeochemical cycle in pollution abatement. [2]
b) Differentiate between terrestrial ecosystem and aquatic ecosystem. [3]
c) What are the environmental effects of mineral extraction? [2]
d) Summarize the major reasons for deforestation. List the ill effects of deforestation. [3]
e) What is meant by species diversity? [2]
f) Write the methodology involved in ex-situ and in-situ conservation of a species. [3]
g) Identify the sources of noise pollution in rural areas. List out the health hazards of noise pollution. [2]
h) What are the ambient air quality standards prescribed by central pollution control board in India? [3]
i) How crazy consumerism affects the environment? [2]
j) What are the salient features of wildlife protection act? [3]

PART-B

(50 Marks)

2. Describe the components that make up the structural aspects and functional aspects of an ecosystem. [10]

OR

3. Explain the mechanism involved in the energy flow between various components of an ecosystem. [10]

4.a) Describe the measures to be taken for the better management of available drinking water resources.
b) Discuss the environmental impacts of building the water reservoirs and dams. [5+5]

OR

5. Explain the sources, commercial applications and limitations of biomass energy. [10]

6.a) Enumerate the reasons and need for: genetic diversity and ecosystem diversity.
b) How the loss of biodiversity contributes to global climatic changes? [7+3]

OR

7.a) Explain the ten major Biogeographic zones situated in India.
b) With examples, discuss the social values of biodiversity. [7+3]

8. Describe the mechanism of polluting the soil by:
excess use of fertilizer, pesticides and excess salts. [10]

OR

9. Explain the sources and ill effects of ozone layer depletion. Suggest few methods to reduce the effect due to depleting ozone layer. [10]

10.a) Describe the sources and environmental impacts of municipal solid waste.
b) What are hazardous solid wastes? Give examples. [7+3]

OR

11. Explain the characteristics, structure, stages and techniques used for Environmental Impact Assessment (EIA). [10]

---ooOoo---

R13

Code No: 114AE

JAWAHARLAL NEHRU TECHNOLOGICAL UNIVERSITY HYDERABAD

B.Tech II Year II Semester Examinations, May - 2017

ELECTRONIC CIRCUITS

(Electrical and Electronics Engineering)

Time: 3 Hours Max. Marks: 75

Note: This question paper contains two parts A and B.
Part A is compulsory which carries 25 marks. Answer all questions in Part A.
Part B consists of 5 Units. Answer any one full question from each unit.
Each question carries 10 marks and may have a, b, c as sub questions.

PART- A

(25 Marks)

1.a) Which configuration in BJT provides the Current gain? [2]
b) How amplifiers are classified according to the type of transistor configuration? [3]
c) What the term f_β indicates at high frequency? [2]
d) What is Frequency Distortion? [3]
e) Distinguish between comparators and clipping circuits. [2]
f) What are the applications of Schmitt trigger? [3]
g) Explain the operation of Heat sinks. [2]
h) Why RC circuits are commonly used compared to RL circuits? [3]
i) How does diode acts as a switch? [2]
j) Name the technologies which use bipolar transistors. [3]

PART-B

(50 Marks)

2. Draw the circuit of an emitter follower, and derive the expressions for A_I, A_V, R_I, R_O in terms of CE parameters. [10]

OR

3. Determine the effect of negative feedback on the input and output impedances of a Voltage-Series feedback amplifier. Show the circuit schematic diagram. [10]

4.a) Draw the ideal and actual frequency response curves of single stage amplifiers.
b) Write a short note on Design of High frequency Amplifiers. [5+5]

OR

5.a) Draw and explain the FET high frequency model.
b) Write a short note on Low frequency response of BJT amplifiers. [5+5]

6.a) With help of neat circuit diagram and waveforms, explain the working of a collector coupled Monostable multivibrator.
b) Why commutating capacitors are used in Multivibrators? [7+3]

OR

7.a) Draw a circuit using diodes to transmit that part of a sine wave which lies between -4V and -7V.
b) With the help of a neat diagram, explain the working of an emitter-coupled clipper. [5+5]

8.a) Explain the high pass RC circuit response for sinusoidal input and derive expression for cut-off frequency.

b) Discuss the concept of Thermal Runway. [6+4]

OR

9. Draw the circuit diagram of Class-B Complementary Push-Pull Amplifier and explain its working and derive the expression for maximum conversion efficiency. [10]

10.a) Explain the operation of transistor switch in saturation.

b) Write a short note on piecewise linear diode characteristics. [5+5]

OR

11.a) Explain the Break down voltage consideration of transistor.

b) Discuss about saturation parameters of Transistor and their variation with temperature. [5+5]

---ooOoo---

R09

Code No: 54060

JAWAHARLAL NEHRU TECHNOLOGICAL UNIVERSITY HYDERABAD

B.Tech II Year II Semester Examinations, May - 2017

PRODUCTION TECHNOLOGY

(Common to ME, AME)

Time: 3 hours **Max. Marks: 75**

Answer any five questions
All questions carry equal marks

1.a)	Write in detail different inspections carried out in castings.	
b)	What is gating system? Explain the design of gating system.	[8+7]
2.a)	Write the difference between Runners and Risers.	
b)	What are the Allowances to be given in pattern? Explain.	[7+8]
3.a)	Discuss the classification of Welding process.	
b)	Discuss the Oxy-acetylene welding process set-up.	[7+8]
4.a)	What are the Destructive testing methods used in welding?	
b)	What are the Industrial application of Explosive welding?	[8+7]
5.a)	Explain the advantages and disadvantages of Hot and Cold working process.	
b)	Explain the function of planetary hot rolling process.	[8+7]
6.a)	Explain the functioning of two-high rolling mill and multi-pass-rolling mill.	
b)	Explain the process of Stamping.	[8+7]
7.a)	Derive the forces required in Extrusion process.	
b)	What are the factors affecting Rolling process? Explain.	[7+8]
8.a)	Explain briefly Testing of Plastics.	
b)	What are the important considerations to be taken while designing plastic parts? Discuss.	[7+8]

---ooOoo---

R09

Code No: 54008

JAWAHARLAL NEHRU TECHNOLOGICAL UNIVERSITY HYDERABAD

B.Tech II Year II Semester Examinations, May - 2017

POWER SYSTEMS-I

(Electrical and Electronics Engineering)

Time: 3 hours **Max. Marks: 75**

Answer any five questions

All questions carry equal marks

1.a) Discuss about various heat exchanger units and their operation in thermal power systems.

b) Discuss about the construction and working of Electrostatic precipitator. [8+7]

2.a) Draw the plant layout of a Gas turbine power plant and explain the functions of various units of it.

b) Explain the open and closed cycle operations of Gas turbine power plant. [8+7]

3.a) Compare over Head and Underground distribution systems.

b) A d.c two wire distributor AB is fed from A and supplies six concentrated loads of 50 A at C, D, E, F, G and H as shown in the figure. What must be the resistance of each section so that the maximum voltage drop for any consumer does not exceed 7 volts? Also calculate the power loss with this resistance. Assume AC=CD=DE=EF=FG=GH=HB. [7+8]

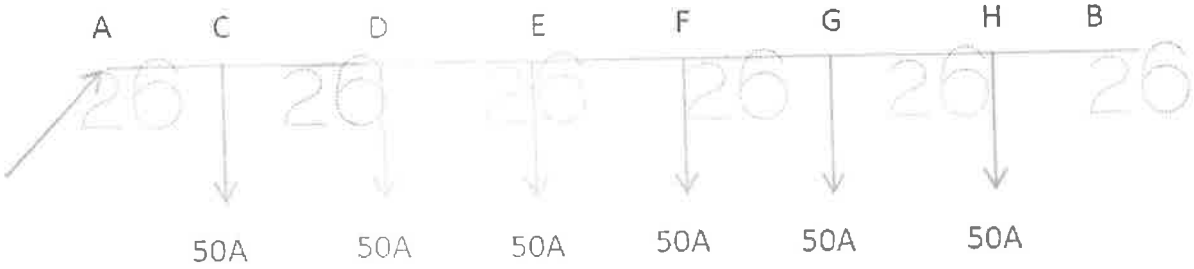

4. A single phase a.c. distributor AB 300 metres long is fed from end A and is loaded as under: (a) 100 A at 0·707 p.f. lagging 200 m from point A (b) 200 A at 0·8 p.f. lagging 300 m from point A. The load resistance and reactance of the distributor is 0·2 Ω and 0·1 Ω per kilometre. Calculate the total voltage drop in the distributor. The load power factors refer to the voltage at the far end. [15]

5.a) Explain the construction, installation and maintenance aspects of GIS substations.

b) List out different types of Gas Insulated sub-stations and mention their advantages. [7+8]

6.a) What are the various causes of low power factor and explain the methods to improve?

b) Explain the dependency of voltage on reactive power. [8+7]

7.a) Differentiate between load curve and load duration curve.

b) A generating station supplies the following loads: 150 MW, 120 MW, 85MW, 60 MW and 5 MW. The station has a maximum demand of 220 MW and the annual load factor of the station is 48%. Calculate i) the number of units supplied annually ii) Diversity factor iii) the demand factor. [7+8]

8.a) Explain different types of Tariff mechanisms and their relevance with respect to various consumers.

b) The consumer has an annual consumption of 700080 kWh. The charge is Rs 100 /kW of maximum demand plus 5 paise per kWh. Find the annual bill and the overall costs per kWh if the load factor is 40%. [7+8]

---ooOoo---

R09

Code No: 54001

JAWAHARLAL NEHRU TECHNOLOGICAL UNIVERSITY HYDERABAD

B.Tech II Year II Semester Examinations, May - 2017

PROBABILITY AND STATISTICS

(Common to CE, CHEM, IT, PTM)

Time: 3 hours Max. Marks: 75

Answer any five questions
All questions carry equal marks

1.a) Two dice are tossed once. Find the probability of getting an even number on the first die or a total of 8.

b) A random variable X has following probability function:

X	4	5	6	8
P(X)	0.1	0.3	0.4	0.2

Find: i) expectation ii) variance and iii) standard deviation. [7+8]

2.a) Derive the mean and variance of a poisson distribution.

b) Show that poisson distribution is limiting case of Binomial distribution. [7+8]

3.a) A random variable X is normally distributed with mean 15 and standard deviation 5. Find the probability that:
i) $X \geq 20$ ii) $5 \leq x \leq 10$.

b) Show that median of the normal distribution is equal to mean. [8+7]

4.a) Find 95% confidence limits for the mean of a normal distribution with variance $\sigma^2 = 0.25$, using a sample of n =100 values with mean $\bar{x}$ =212.3.

b) Write short notes on the following:
i) Null hypothesis ii) Alternate hypothesis
iii) Type I error and iv) Type II error. [7+8]

5.a) In a random sample of 125 cool drinkers, 68 said they prefer Thums Up to Pepsi. Test the null hypothesis P = 0.5 against the alternative hypothesis P > 0.5.

b) In two large populations, there are 30% and 25% respectively of fair haired people. Is this difference likely to be hidden in samples of 1200 and 900 respectively from the two populations? [7+8]

6. Compute the coefficient of correlation between X and Y from the following data:

X	1	2	3	4	5	6	7	8	9
Y	12	11	13	15	14	17	16	19	10

Also, find the regression lines. [15]

7. State and prove Arrival theorem. [15]

8. A gambler has Rs.2. He bets Rs.1 at a time and wins Rs.1 with probability $\frac{1}{2}$ and stops playing if he loses Rs.2 or wins Rs.4. Find:
a) the tpm of the related Markov chain.
b) the probability that he has lost his money at the end of 5 plays and
c) the probability that the game lasts more than 7 plays. [15]

---ooOoo---

R07

Code No: V0223

JAWAHARLAL NEHRU TECHNOLOGICAL UNIVERSITY HYDERABAD

B.Tech II Year II Semester Examinations, May - 2017

CONTROL SYSTEMS

(Common to EEE, ECE)

Time: 3 hours **Max. Marks: 80**

Answer any five questions

All questions carry equal marks

1.a) Explain the characteristics of feedback and effects of feedback.

b) Find the transfer function for the following system shown in figure 1. [8+8]

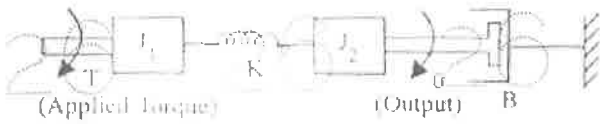

Figure: 1

2.a) Derive the transfer function of Armature controlled DC servo motor.

b) Using signal flow graph method determine the gain C/R for the block diagram shown in figure 2. [8+8]

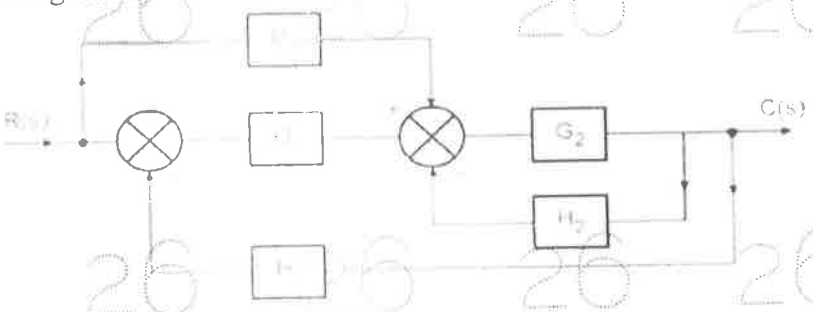

Figure: 2

3.a) Explain effects of proportional derivative and proportional integral controllers in system performance.

b) Find the Error coefficients for step, ramp and parabolic inputs for unity feed-back System having the forward transfer function $G(s) = \frac{14(s+3)}{s(s^2+2s+2)(s+5)}$. [6+10]

4.a) Using Routh criterion determine the range of values of k for stability for the following system.

$$\frac{C(s)}{R(s)} = \frac{k}{s(s^2+s+1)(s+4)+k}$$

b) Explain the effects of adding poles and zeros to G(s)H(s) on the root loci. [8+8]

5.a) Sketch the bode plot for the given system whose H(s) =1, and $G(s) = \frac{1}{s(s+4)(s+0.2)}$

i) Find gain margin ii) Find the phase margin for damping ratio of 0.5.

b) Discuss the advantages and disadvantages of frequency response analysis. [10+6]

6.a) Draw and explain polar plots for type-0, type-1 and type-2 systems.

b) Discuss the effect of adding poles and zeros to G(s)H(s) on the shape of Nyquist plots. [8+8]

7. A unity feedback system has an open loop transfer function G(S)=K/S(1+2S). Design a suitable lag compensator so that phase margin is 40^0 and the steady state error for ramp input is less than or equal to 0.2. [16]

8.a) State and prove the properties of state transition matrix.

b) A linear time invariant system is characterized by the state equation

$$\begin{bmatrix} \dot{x}1 \\ \dot{x}2 \end{bmatrix} = \begin{bmatrix} 1 & 0 \\ 1 & 1 \end{bmatrix} \begin{bmatrix} x1 \\ x2 \end{bmatrix} + \begin{bmatrix} 0 \\ 1 \end{bmatrix} u$$

Where u is a unit step function. Compute the solution of these equations assuming initial condition $X_0=\begin{bmatrix} 1 \\ 0 \end{bmatrix}$. Use inverse Laplace transform technique. [6+10]

---ooOoo---

Code No: 124DJ

R15

JAWAHARLAL NEHRU TECHNOLOGICAL UNIVERSITY HYDERABAD
B.Tech II Year II Semester Examinations, May - 2017
PRINCIPLES OF PROGRAMMING LANGUAGES
(Information Technology)

Time: 3 Hours **Max. Marks: 75**

Note: This question paper contains two parts A and B.
Part A is compulsory which carries 25 marks. Answer all questions in Part A.
Part B consists of 5 Units. Answer any one full question from each unit.
Each question carries 10 marks and may have a, b, c as sub questions.

PART- A

(25 Marks)

1.a) Define parsing. [2]
b) Differentiate between procedural languages and object oriented languages. [3]
c) What mixed-mode assignments are allowed in C and Java? [2]
d) Write any two design issues for arithmetic expressions. [3]
e) What is meant by static and dynamic allocation? [2]
f) List design issues of sub programs. [3]
g) Define monitor. [2]
h) What is the difference between checked and unchecked exception in java? [3]
i) What data types were parts of original LISP? [2]
j) What type inferencing is used in ML? [3]

PART-B

(50 Marks)

2.a) What do you mean by axiomatic semantics? Explain with an illustration computation of weakest precondition for a sequence of statements.
b) What are the factors that influence the basic design of programming languages? [5+5]

OR

3.a) Describe the basic concept of denotational semantics.
b) Explain in detail about various language evaluation criteria and the characteristics that affect them. [5+5]

4.a) Explain about stack dynamic variables and explicit heap dynamic variables.
b) Explain about heap management of a single size and variable size segments. [5+5]

OR

5.a) Explain about subscript bindings and various array categories.
b) What are guarded commands? Explain. [5+5]

6.a) Explain how subprogram is overloaded. Give examples.
b) Explain about parameterized abstract data types with an example in C. [5+5]

OR

7.a) Explain how various implementation models of parameter passing are actually implemented.
b) Distinguish between name type compatibility and structure type compatibility using examples. [5+5]

8.a) Explain in brief about exception handling in Ada.
b) Discuss in detail Terms and Goals statements in Prolog. [5+5]

OR

9.a) What is a semaphore? What are the operations performed on a semaphore?
b) Write short notes on C# threads. [5+5]

10.a) Explain the basic primitives of LISP. Give suitable examples.
b) Explain in detail ML inferencing process. [5+5]

OR

11.a) Explain about the data types and their values in python.
b) What is the importance of module library in python? [5+5]

---ooOoo---

Code No: 124DK

R15

JAWAHARLAL NEHRU TECHNOLOGICAL UNIVERSITY HYDERABAD
B.Tech II Year II Semester Examinations, May - 2017
PROBABILITY AND STATISTICS
(Common to CE, CEE)

Time: 3 Hours **Max. Marks: 75**

Note: This question paper contains two parts A and B.
Part A is compulsory which carries 25 marks. Answer all questions in Part A. Part B consists of 5 Units. Answer any one full question from each unit. Each question carries 10 marks and may have a, b, c as sub questions.

PART- A

(25 Marks)

1.a) The probability of a man hitting a target is $\frac{1}{3}$. How many times must he fires so that the probability of his hitting the target at least once is more than 90%. [2]

b) Find the mean and variance of the distribution $f(x) = e^{-x}, x > 0$. [3]

c) Define standard error and correlation coefficient. [2]

d) The continuous random variable X has probability density function

$$f_x(x) = \begin{cases} \frac{2}{25}(x+2), \text{for} -2 < x < 3 \\ 0, \quad \text{elsewhere} \end{cases}$$

Find the probability density function of $Y = X^2$. [3]

e) Write the properties of Z-distribution. [2]

f) Construct 99% confidence interval for the true proportion of computer literates if 47 out of 100 persons from rural areas are computer literates. [3]

g) Explain about exponential distribution. [2]

h) Define the terms Busy period and Traffic intensity. [3]

i) Discuss about classification of random process. [2]

j) Define stationary and non-stationary random process. [3]

PART-B

(50 Marks)

2.a) Show that for normal distribution the quartile deviation, mean deviation and standard deviation are approximately 10:12:15.

b) A player tosses 3 fair coins. He wins Rs.500 if 3 heads appear, Rs.300 if 2 heads appear, Rs.100 if one head occurs. On the other hand, he loses Rs.1500 if 3 tails occurs. Find the expected gain of the player. [5+5]

OR

3.a) Find the moment generating function of $f(x) = \frac{1}{8}(3c_x), x = 0, 1, 2, 3.$ and hence find its mean and variance.

b) If 3 fair coins are tossed and if X is the total number of heads in the outcome. Show that X is a random variable. [5+5]

4. The joint probability density function of the random variable X and Y is given by $f(x, y) = K(xy + y^2), 0 \le x \le 1, 0 \le y \le 2.$
Find $P(Y > 1), P\left(X > \frac{1}{2}, Y < 1\right)$ and $P(X + Y \le 1)$ [10]

OR

5. Use formula $\rho = \frac{\sigma_{x+y}^2 - \sigma_x^2 - \sigma_y^2}{2\sigma_x\sigma_y}$, compute the correlation coefficient to the following data. [10]

x	62	56	36	66	25	75	82	78
y	58	44	51	58	60	68	62	84

6.a) Discuss test of independence of attributes with a suitable example.

b) A briefcase manufacturing company claims that 80% of executives carry briefcases produced by them. Verify its claims if in a random sample of 900 executives, 675 used the company's briefcases. Use 5% level of significance. [5+5]

OR

7.a) Discuss various types of alternative hypothesis with suitable example.

b) The average weekly losses of man hours due to strikes in an institute before and after a disciplinary program was implemented are as follows

Before	45	73	46	124	33	57	83	34	26	17
After	36	60	44	119	35	51	77	29	24	11

Is there reason to believe that the disciplinary program is effective at 0.05 LOS? [5+5]

8.a) Discuss basic queuing process.

b) Workers come to a tool store room to enquiry about the special tools for a particular job. The average time between the arrivals is 60 seconds and the arrivals are assumed to be in Poisson distribution. The average service time is 40 seconds. Find i) average queue length ii) Average length of non-empty queue. [5+5]

OR

9. A PC repairman finds that the time spend on jobs has an exponential distribution with mean 30 minutes. If the sets are repaired in the order, in which they come in, and if the arrival of sets is approximately Poisson with an average of 10 per 8 hour day, what is the repairman's expected idle time each day? How many jobs are ahead of the average set just brought in? [10]

10.a) A fair die is tossed repeatedly. If X_n denotes the maximum of the number occurring in the first n tosses, find the transition probability matrix P of the Markov chain $\{X_n\}$. Find also P^2 and $P(X_2 = 6)$.

b) The transition probability matrix of a Markov chain is given by $\begin{bmatrix} 0.3 & 0.7 & 0 \\ 0.1 & 0.4 & 0.5 \\ 0 & 0.2 & 0.8 \end{bmatrix}$.

Is this matrix irreducible? [5+5]

OR

11. Three boys A, B, C are throwing a ball to each other. B always throws the ball to C; C always throws the ball to A; but A is just a likely to throw the ball to C as to B. Show that the process is Markovian. Find the transition matrix and classify the states. Do all the states are ergodic? [10]

---ooOoo---

Code No: 124DU

R15

JAWAHARLAL NEHRU TECHNOLOGICAL UNIVERSITY HYDERABAD
B.Tech II Year II Semester Examinations, May - 2017
THERMAL ENGINEERING – I
(Common to ME, AME)

Time: 3 Hours **Max. Marks: 75**

Note: This question paper contains two parts A and B.
Part A is compulsory which carries 25 marks. Answer all questions in Part A. Part B consists of 5 Units. Answer any one full question from each unit. Each question carries 10 marks and may have a, b, c as sub questions.

PART- A

(25 Marks)

1.a)	What are the different strokes in two stroke engines.	[2]
b)	List out the differences between the SI engine and CI engine.	[3]
c)	What is meant by Cetane number?	[2]
d)	Describe the three desirable properties of CI engine fuels.	[3]
e)	What is the importance for measurement of exhaust gas temperature?	[2]
f)	List out the functions of compressors.	[3]
g)	On which principle the centrifugal pump works.	[2]
h)	Explain the importance of slip factor in compressor.	[3]
i)	What is meant by tonne of refrigeration?	[2]
j)	List out the advantages of air refrigeration.	[3]

PART-B

(50 Marks)

2.a) How does the Zenith carburetor fulfill the requirements of a good carburetor.
b) Explain the working of battery ignition system with the neat sketch. [5+5]

OR

3.a) Explain the working of solid injection system with neat sketch.
b) Explain the working of splash lubricating system with neat sketch. [5+5]

4.a) Briefly explain the stages of combustion in SI engines elaborating the flame front propagation.
b) Explain the effect of various engine variables on SI engine knock. [5+5]

OR

5.a) What are the methods to be followed to avoid knocking in SI engine.
b) What are anti knock agents? Indicate the substances used and their effects on reducing of knocking. [5+5]

6. During a test on a diesel engine the following observations were made:
The power developed by the engine is used for driving a D.C. generator. The output of the generator was 210 A at 200V; the efficiency of generator being 82%.The quantity of fuel supplied to the engine was 11.2 kg/h; calorific value of fuel being 42600kJ/kg. The air-fuel ratio was 18:1. The exhaust gases were passed through a exhaust gas calorimeter for which the observations were as follows:
Water circulated through exhaust gas calorimeter = 580 liters/hr. Temperature rise of water through calorimeter=36^0C. Temperature of exhaust gases at exit from calorimeter=98^0C. Ambient temperature=20^0C.
Heat lost to jacket cooling water is 32% of the total heat supplied.
If the specific heat of exhaust gases be 1.05kJ/kg K. Draw up the heat balance sheet on minute basis. [10]

OR

7.a) Explain the air box method for the measurement of air consumption in internal combustion engine.

b) A six cylinder, 4 stroke SI engine having a piston displacement of 700cm^3 per cylinder developed 78kW at 3200r.p.m. and consumed 27 kg of petrol per hour. The calorific value of petrol is 44 MJ/kg. Estimate:
i) The volumetric efficiency of the engine if the air-fuel ratio is 12 and intake air is at 0.9 bar, 32^{0}C ii) The brake thermal efficiency iii) The brake torque
For air, R=0.287kJ/kg K. [5+5]

8. A centrifugal compressor running at 8000 rpm delivers 660m^3/min of free air. The air is compressed from 1.01 bar and 15^{0}C to a pressure of 3 with an isentropic efficiency of 80%. Blades are radial at outlet of impeller and flow velocity of 60 m/s may be assume throughout constant. The outer radius of impeller is thrice the inner and the slip factor may be assumed as 0.8.The blade area coefficient may be assumed 0.8 at inlet. Calculate:
a) Final temperature of air b) Theoretical power c) Impeller diameters at inlet and outlet d) Breadth of impeller at inlet e) Impeller blade angle at inlet f) Diffuser blade angle at inlet. [10]

OR

9.a) Explain the working of roots blower compressor with neat sketch.

b) A centrifugal compressor delivers 50 kg of air per minute at a pressure of 2 bar and 97^0 C. The intake pressure and temperature of air is 1 bar and 15^{0}C. If no heat is lost to the surrounding, find: i) index of compression ii) Power required, if the compression is isothermal, Take R=287/kg K. [5+5]

10.a) Explain the working of Vapour compression refrigeration system with a neat diagram.

b) A Carnot cycle machine operates between the temperature limits of 47^{0}C and -30^{0}C. Determine the COP when it operates as i) refrigerating machine ii) A heat pump iii) A heat engine. [5+5]

OR

11.a) Explain the working of vapour absorption system with neat sketch.

b) A Bell-Coleman refrigerator works between 4 bar and 1 bar pressure limits. After compression, the cooling water reduces the air temperature to 17^{0}C. What is the lowest temperature produced by the ideal machine?
Compare the coefficient of performance of this machine with that of the ideal Carnot cycle machine working between the same pressure limits, the temperature at the beginning of compression being -13^0 C. [5+5]

---ooOoo---

Code No: 124AB

R15

JAWAHARLAL NEHRU TECHNOLOGICAL UNIVERSITY HYDERABAD
B.Tech II Year II Semester Examinations, May - 2017
ELECTRICAL MACHINES – II
(Electrical and Electronics Engineering)

Time: 3 Hours **Max. Marks: 75**

Note: This question paper contains two parts A and B.
Part A is compulsory which carries 25 marks. Answer all questions in Part A.
Part B consists of 5 Units. Answer any one full question from each unit.
Each question carries 10 marks and may have a, b, c as sub questions.

PART- A

(25 Marks)

1.a) Explain the need of finding Voltage regulation of a transformer. [2]
b) Explain the significance of Voltage transformation Ratio (K) of a transformer. [3]
c) Distinguish between Power and Distribution transformers. [2]
d) What are hysteresis and eddy current losses and how can we reduce them? [3]
e) Explain the importance of Polarity test in transformer. [2]
f) What is the advantage of V – V connection? [3]
g) List the applications of three phase induction motor. [2]
h) Briefly explain the phenomena of Crawling in Induction motor. [3]
i) How come the large rating Induction motors can be started? [2]
j) Explain in brief the different methods of Speed control of Induction motors. [3]

PART-B

(50 Marks)

2.a) Derive the emf equation of a transformer.
b) Draw and explain the total equivalent circuit of the transformer referred to Primary. [5+5]

OR

3.a) Draw the no-load and ON-load phasor diagrams for lagging p.f of 1-ϕ Transformer.
b) A 4400 V, 50 Hz transformer has a hysteresis loss of 1250 W, eddy current loss of 2050 W and full load copper loss of 4000 W. If the transformer is supplied at 6600V, 75 Hz. What will be the losses? Assume that the full – load current remains the same. [5+5]

4.a) Explain the necessity of performing the O.C and S.C tests of a single phase transformer.
b) A single – phase 200 KVA transformer has an efficiency of 95 % on full – load at 0.8 power factor and on half load at 0.8 power factor. Find:
i) Iron loss ii) Full – load copper loss. [5+5]

OR

5.a) Explain the load sharing by two transformers if they have unequal voltage ratios.
b) The maximum efficiency of a 500 KVA, 3300/500 V, 50 Hz single phase transformer is 97 % and occurs at ¾ full load, unity power factor. If the impedance is 10 %, calculate the regulation at full load; power factor is 0.8 lagging. [5+5]

6.a) List the advantages and disadvantages of Star –Star connection of transformers.

b) A three phase 1000 KVA, 6600/1100 V transformer is delta connected on the primary and star connected on the secondary. The primary resistance/phase is 1.8 Ω and secondary resistance /phase is 0.025Ω. Determine the efficiency on full load at Unity power factor and 0.8 Power factor lagging if the iron loss is 15 KW. [5+5]

OR

7.a) Explain the conditions to be fulfilled for paralleling three –phase transformers.

b) Two single phase electric furnaces A and B are supplied at 220V from a three phase, 1100 V supply by means of a Scott – connected transformer combination. If the total output is 600 KW at 0.6 power factor lagging, determine the currents in the winding and transformation ratio of each transformer. [5+5]

8.a) Derive the equation for frequency of rotor current under running conditions.

b) A 50 H.P, 6- pole, 50 Hz, slip ring induction motor runs at 960 rpm on full load with a rotor current of 40 A. Allowing 300 W for copper loss in the short – circuiting gear and 1200 W for mechanical losses, find the resistance per phase of the three phase rotor winding. [5+5]

OR

9.a) Explain the constructional details of the three phase Induction motor.

b) A 3- phase, 6-pole, 50 Hz induction motor has 160 N-m as it's useful full-load torque. The rotor emf is observed to make 90 cycles per minute. Calculate: i) Motor output in KW ii) Copper losses in rotor iii) Motor input iv) Efficiency if mechanical torque lost in friction and windage is 20 N-m and stator losses are 800 W. [5+5]

10.a) Explain the working of Induction generator.

b) Explain the constructional details and working of star-delta starter used in 3-ϕ I.M. [5+5]

OR

11. Draw the circle diagram of a 3-phase I.M. Explain how do you estimate the performance characteristics of 3-ϕ I.M. [10]

---ooOoo---

Code No: 124CB

R15

JAWAHARLAL NEHRU TECHNOLOGICAL UNIVERSITY HYDERABAD
B.Tech II Year II Semester Examinations, May - 2017
DESIGN AND ANALYSIS OF ALGORITHMS
(Computer Science and Engineering)

Time: 3 Hours **Max. Marks: 75**

Note: This question paper contains two parts A and B.
Part A is compulsory which carries 25 marks. Answer all questions in Part A. Part B consists of 5 Units. Answer any one full question from each unit. Each question carries 10 marks and may have a, b, c as sub questions.

PART- A

(25 Marks)

1.a) Define order of growth. [2]
b) If f (n) =$5n^2$+6n+4 then prove that f (n) is $0(n^2)$. [3]
c) Define a spanning tree and minimum spanning tree. [2]
d) Define articulation point. [3]
e) Define greedy method. [2]
f) State the principle of optimality. [3]
g) List the application of Backtracking. [2]
h) Define E-node. [3]
i) Define class P. [2]
j) Explain briefly about optimization problem. [3]

PART-B

(50 Marks)

2.a) Write the pseudo code that input of n integers and output them in non decreasing order.
b) Describe the Master's theorem. Solve the following recurrence relations by using Master's theorem.
i) T (n) =4T (n/2) +n ii) T (n) =2T (n/2) +nlogn [5+5]

OR

3.a) Define recurrence equation? Find the time complexity of merge sort from recurrence relation using substitution method.
b) Write the pseudo code for binary search and analyze the time complexity. [5+5]

4.a) Compare and contrast BFS and DFS.
b) Define strongly connected components. Explain the properties of strongly connected components. [5+5]

OR

5.a) Discuss about various binary tree traversal methods with example.
b) Differentiate greedy and dynamic programming. [5+5]

6.a) Discuss about fractional knap sack problem. Consider the following instance of knapsack problem n=3, m=20, profits (p_1, p_2, p_3)=(25, 24, 15) and weights(w_1, w_2, w_3)=(18,15,10). Obtain the optimal solution using greedy approach.
b) Compute all pair shortest path for following graph shown in figure 1. [5+5]

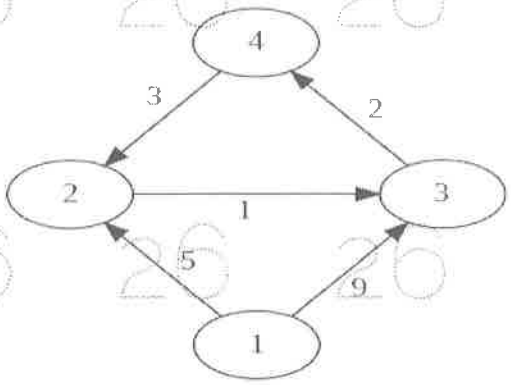

Figure: 1

OR

7.a) Write the pseudo code for dijkshra's algorithm for single source shortest path problem.

b) Describe travelling sales person problem. Find the minimum cost tour for the following graph using dynamic programming. Costs of the edges are given by matrix shown in figure 2. [5+5]

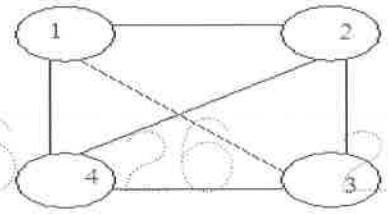

0	10	15	20
5	0	9	10
6	13	0	12
8	8	9	0

Figure: 2

8. What is graph coloring problem? Describe the back tracking technique to m-coloring with following planar graph shown in figure 3. [10]

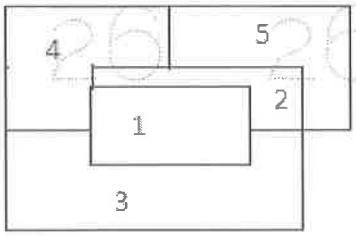

Figure: 3

OR

9. Write about Hamiltonian cycle. Draw portion state space tree for the following graph shown in figure 4. [10]

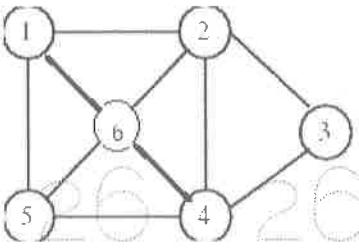

Figure: 4

10.a) Write short notes on 3-SAT problem.

b) Briefly explain deterministic and non deterministic algorithms with example. [5+5]

OR

11.a) Describe about clique problem.

b) Give the relation between NP Hard and NP Complete. [5+5]

---ooOoo---

Code No: 114CS

R13

JAWAHARLAL NEHRU TECHNOLOGICAL UNIVERSITY HYDERABAD
B.Tech II Year II Semester Examinations, May - 2017
DESIGN AND ANALYSIS OF ALGORITHMS
(Computer Science and Engineering)

Time: 3 Hours **Max. Marks: 75**

Note: This question paper contains two parts A and B.
Part A is compulsory which carries 25 marks. Answer all questions in Part A. Part B consists of 5 Units. Answer any one full question from each unit. Each question carries 10 marks and may have a, b, c as sub questions.

PART- A

(25 Marks)

1.a)	Define order of growth.	[2]
b)	If $f(n) = 5n^2+6n+4$ then prove that $f(n)$ is $0(n^2)$.	[3]
c)	Define a spanning tree and minimum spanning tree.	[2]
d)	Define articulation point.	[3]
e)	Define greedy method.	[2]
f)	State the principle of optimality.	[3]
g)	List the application of Backtracking.	[2]
h)	Define E-node.	[3]
i)	Define class P.	[2]
j)	Explain briefly about optimization problem.	[3]

PART-B

(50 Marks)

2.a) Write the pseudo code that input of n integers and output them in non decreasing order.

b) Describe the Master's theorem. Solve the following recurrence relations by using Master's theorem.
i) $T(n) = 4T(n/2) + n$ ii) $T(n) = 2T(n/2) + n\log n$ [5+5]

OR

3.a) Define recurrence equation? Find the time complexity of merge sort from recurrence relation using substitution method.

b) Write the pseudo code for binary search and analyze the time complexity. [5+5]

4.a) Compare and contrast BFS and DFS.

b) Define strongly connected components. Explain the properties of strongly connected components. [5+5]

OR

5.a) Discuss about various binary tree traversal methods with example.

b) Differentiate greedy and dynamic programming. [5+5]

6.a) Discuss about fractional knap sack problem. Consider the following instance of knapsack problem n=3, m=20, profits $(p_1, p_2, p_3)=(25, 24, 15)$ and weights$(w_1, w_2, w_3)=(18,15,10)$. Obtain the optimal solution using greedy approach.

b) Compute all pair shortest path for following graph shown in figure 1. [5+5]

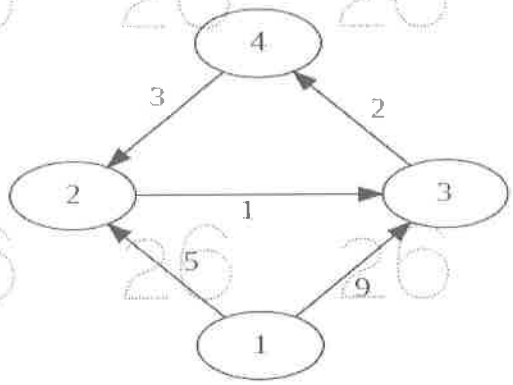

Figure: 1

OR

7.a) Write the pseudo code for dijkshra's algorithm for single source shortest path problem.

b) Describe travelling sales person problem. Find the minimum cost tour for the following graph using dynamic programming. Costs of the edges are given by matrix shown in figure 2. [5+5]

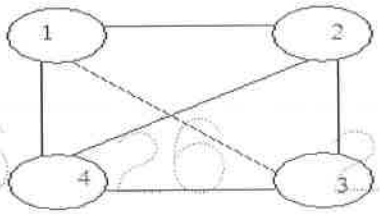

0	10	15	20
5	0	9	10
6	13	0	12
8	8	9	0

Figure: 2

8. What is graph coloring problem? Describe the back tracking technique to m-coloring with following planar graph shown in figure 3. [10]

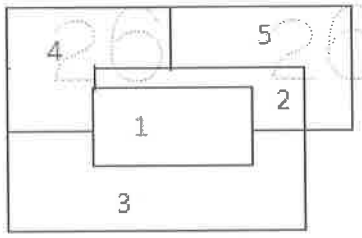

Figure: 3

OR

9. Write about Hamiltonian cycle. Draw portion state space tree for the following graph shown in figure 4. [10]

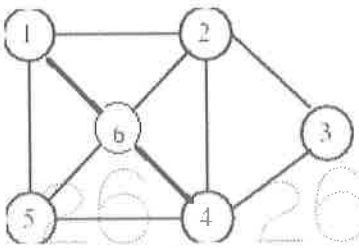

Figure: 4

10.a) Write short notes on 3-SAT problem.

b) Briefly explain deterministic and non deterministic algorithms with example. [5+5]

OR

11.a) Describe about clique problem.

b) Give the relation between NP Hard and NP Complete. [5+5]

---ooOoo---

Code No: 114DK

R13

JAWAHARLAL NEHRU TECHNOLOGICAL UNIVERSITY HYDERABAD

B.Tech II Year II Semester Examinations, May - 2017

PROBABILITY AND STATISTICS

(Common to CE, CEE)

Time: 3 Hours **Max. Marks: 75**

Note: This question paper contains two parts A and B.
Part A is compulsory which carries 25 marks. Answer all questions in Part A. Part B consists of 5 Units. Answer any one full question from each unit. Each question carries 10 marks and may have a, b, c as sub questions.

PART- A

(25 Marks)

1.a) The probability of a man hitting a target is $\frac{1}{3}$. How many times must he fires so that the probability of his hitting the target at least once is more than 90%. [2]

b) Find the mean and variance of the distribution $f(x) = e^{-x}, x > 0$. [3]

c) Define standard error and correlation coefficient. [2]

d) The continuous random variable X has probability density function

$$f_x(x) = \begin{cases} \frac{2}{25}(x+2), \text{for} -2 < x < 3 \\ 0, \quad \text{elsewhere} \end{cases}.$$

Find the probability density function of $Y = X^2$. [3]

e) Write the properties of Z-distribution. [2]

f) Construct 99% confidence interval for the true proportion of computer literates if 47 out of 100 persons from rural areas are computer literates. [3]

g) Explain about exponential distribution. [2]

h) Define the terms Busy period and Traffic intensity. [3]

i) Discuss about classification of random process. [2]

j) Define stationary and non-stationary random process. [3]

PART-B

(50 Marks)

2.a) Show that for normal distribution the quartile deviation, mean deviation and standard deviation are approximately 10:12:15.

b) A player tosses 3 fair coins. He wins Rs.500 if 3 heads appear, Rs.300 if 2 heads appear, Rs.100 if one head occurs. On the other hand, he loses Rs.1500 if 3 tails occurs. Find the expected gain of the player. [5+5]

OR

3.a) Find the moment generating function of $f(x) = \frac{1}{8}(3c_x), x = 0, 1, 2, 3.$ and hence find its mean and variance.

b) If 3 fair coins are tossed and if X is the total number of heads in the outcome. Show that X is a random variable. [5+5]

4. The joint probability density function of the random variable X and Y is given by $f(x, y) = K(xy + y^2), 0 \le x \le 1, 0 \le y \le 2.$

Find $P(Y > 1), P\left(X > \frac{1}{2}, Y < 1\right)$ and $P(X + Y \le 1)$ [10]

OR

5. Use formula $\rho = \frac{\sigma_{x+y}^2 - \sigma_x^2 - \sigma_y^2}{2\sigma_x\sigma_y}$, compute the correlation coefficient to the following data. [10]

x	62	56	36	66	25	75	82	78
y	58	44	51	58	60	68	62	84

6.a) Discuss test of independence of attributes with a suitable example.

b) A briefcase manufacturing company claims that 80% of executives carry briefcases produced by them. Verify its claims if in a random sample of 900 executives, 675 used the company's briefcases. Use 5% level of significance. [5+5]

OR

7.a) Discuss various types of alternative hypothesis with suitable example.

b) The average weekly losses of man hours due to strikes in an institute before and after a disciplinary program was implemented are as follows

Before	45	73	46	124	33	57	83	34	26	17
After	36	60	44	119	35	51	77	29	24	11

Is there reason to believe that the disciplinary program is effective at 0.05 LOS? [5+5]

8.a) Discuss basic queuing process.

b) Workers come to a tool store room to enquiry about the special tools for a particular job. The average time between the arrivals is 60 seconds and the arrivals are assumed to be in Poisson distribution. The average service time is 40 seconds. Find i) average queue length ii) Average length of non-empty queue. [5+5]

OR

9. A PC repairman finds that the time spend on jobs has an exponential distribution with mean 30 minutes. If the sets are repaired in the order, in which they come in, and if the arrival of sets is approximately Poisson with an average of 10 per 8 hour day, what is the repairman's expected idle time each day? How many jobs are ahead of the average set just brought in? [10]

10.a) A fair die is tossed repeatedly. If X_n denotes the maximum of the number occurring in the first n tosses, find the transition probability matrix P of the Markov chain $\{X_n\}$. Find also P^2 and $P(X_2 = 6)$.

b) The transition probability matrix of a Markov chain is given by $\begin{bmatrix} 0.3 & 0.7 & 0 \\ 0.1 & 0.4 & 0.5 \\ 0 & 0.2 & 0.8 \end{bmatrix}$.

Is this matrix irreducible? [5+5]

OR

11. Three boys A, B, C are throwing a ball to each other. B always throws the ball to C; C always throws the ball to A; but A is just a likely to throw the ball to C as to B. Show that the process is Markovian. Find the transition matrix and classify the states. Do all the states are ergodic? [10]

---ooOoo---

Code No: 114AB

R13

JAWAHARLAL NEHRU TECHNOLOGICAL UNIVERSITY HYDERABAD
B.Tech II Year II Semester Examinations, May - 2017
ELECTRICAL MACHINES – II
(Electrical and Electronics Engineering)

Time: 3 Hours **Max. Marks: 75**

Note: This question paper contains two parts A and B.
Part A is compulsory which carries 25 marks. Answer all questions in Part A.
Part B consists of 5 Units. Answer any one full question from each unit.
Each question carries 10 marks and may have a, b, c as sub questions.

PART- A

(25 Marks)

1.a) Explain the need of finding Voltage regulation of a transformer. [2]
b) Explain the significance of Voltage transformation Ratio (K) of a transformer. [3]
c) Distinguish between Power and Distribution transformers. [2]
d) What are hysteresis and eddy current losses and how can we reduce them? [3]
e) Explain the importance of Polarity test in transformer. [2]
f) What is the advantage of V – V connection? [3]
g) List the applications of three phase induction motor. [2]
h) Briefly explain the phenomena of Crawling in Induction motor. [3]
i) How come the large rating Induction motors can be started? [2]
j) Explain in brief the different methods of Speed control of Induction motors. [3]

PART-B

(50 Marks)

2.a) Derive the emf equation of a transformer.
b) Draw and explain the total equivalent circuit of the transformer referred to Primary. [5+5]

OR

3.a) Draw the no-load and ON-load phasor diagrams for lagging p.f of 1-ϕ Transformer.
b) A 4400 V, 50 Hz transformer has a hysteresis loss of 1250 W, eddy current loss of 2050 W and full load copper loss of 4000 W. If the transformer is supplied at 6600V, 75 Hz. What will be the losses? Assume that the full – load current remains the same. [5+5]

4.a) Explain the necessity of performing the O.C and S.C tests of a single phase transformer.
b) A single – phase 200 KVA transformer has an efficiency of 95 % on full – load at 0.8 power factor and on half load at 0.8 power factor. Find:
i) Iron loss ii) Full – load copper loss. [5+5]

OR

5.a) Explain the load sharing by two transformers if they have unequal voltage ratios.
b) The maximum efficiency of a 500 KVA, 3300/500 V, 50 Hz single phase transformer is 97 % and occurs at ¾ full load, unity power factor. If the impedance is 10 %, calculate the regulation at full load; power factor is 0.8 lagging. [5+5]

6.a) List the advantages and disadvantages of Star –Star connection of transformers.

b) A three phase 1000 KVA, 6600/1100 V transformer is delta connected on the primary and star connected on the secondary. The primary resistance/phase is 1.8 Ω and secondary resistance /phase is 0.025Ω. Determine the efficiency on full load at Unity power factor and 0.8 Power factor lagging if the iron loss is 15 KW. [5+5]

OR

7.a) Explain the conditions to be fulfilled for paralleling three –phase transformers.

b) Two single phase electric furnaces A and B are supplied at 220V from a three phase, 1100 V supply by means of a Scott – connected transformer combination. If the total output is 600 KW at 0.6 power factor lagging, determine the currents in the winding and transformation ratio of each transformer. [5+5]

8.a) Derive the equation for frequency of rotor current under running conditions.

b) A 50 H.P, 6- pole, 50 Hz, slip ring induction motor runs at 960 rpm on full load with a rotor current of 40 A. Allowing 300 W for copper loss in the short – circuiting gear and 1200 W for mechanical losses, find the resistance per phase of the three phase rotor winding. [5+5]

OR

9.a) Explain the constructional details of the three phase Induction motor.

b) A 3- phase, 6-pole, 50 Hz induction motor has 160 N-m as it's useful full-load torque. The rotor emf is observed to make 90 cycles per minute. Calculate: i) Motor output in KW ii) Copper losses in rotor iii) Motor input iv) Efficiency if mechanical torque lost in friction and windage is 20 N-m and stator losses are 800 W. [5+5]

10.a) Explain the working of Induction generator.

b) Explain the constructional details and working of star-delta starter used in 3-ϕ I.M. [5+5]

OR

11. Draw the circle diagram of a 3-phase I.M. Explain how do you estimate the performance characteristics of 3-ϕ I.M. [10]

---ooOoo---

Code No: 114DJ

R13

JAWAHARLAL NEHRU TECHNOLOGICAL UNIVERSITY HYDERABAD
B.Tech II Year II Semester Examinations, May - 2017
PRINCIPLES OF PROGRAMMING LANGUAGES
(Information Technology)

Time: 3 Hours **Max. Marks: 75**

Note: This question paper contains two parts A and B.
Part A is compulsory which carries 25 marks. Answer all questions in Part A.
Part B consists of 5 Units. Answer any one full question from each unit.
Each question carries 10 marks and may have a, b, c as sub questions.

PART- A

(25 Marks)

1.a) Define parsing. [2]
b) Differentiate between procedural languages and object oriented languages. [3]
c) What mixed-mode assignments are allowed in C and Java? [2]
d) Write any two design issues for arithmetic expressions. [3]
e) What is meant by static and dynamic allocation? [2]
f) List design issues of sub programs. [3]
g) Define monitor. [2]
h) What is the difference between checked and unchecked exception in java? [3]
i) What data types were parts of original LISP? [2]
j) What type inferencing is used in ML? [3]

PART-B

(50 Marks)

2.a) What do you mean by axiomatic semantics? Explain with an illustration computation of weakest precondition for a sequence of statements.
b) What are the factors that influence the basic design of programming languages? [5+5]

OR

3.a) Describe the basic concept of denotational semantics.
b) Explain in detail about various language evaluation criteria and the characteristics that affect them. [5+5]

4.a) Explain about stack dynamic variables and explicit heap dynamic variables.
b) Explain about heap management of a single size and variable size segments. [5+5]

OR

5.a) Explain about subscript bindings and various array categories.
b) What are guarded commands? Explain. [5+5]

6.a) Explain how subprogram is overloaded. Give examples.
b) Explain about parameterized abstract data types with an example in C. [5+5]

OR

7.a) Explain how various implementation models of parameter passing are actually implemented.
b) Distinguish between name type compatibility and structure type compatibility using examples. [5+5]

8.a) Explain in brief about exception handling in Ada.

b) Discuss in detail Terms and Goals statements in Prolog. [5+5]

OR

9.a) What is a semaphore? What are the operations performed on a semaphore?

b) Write short notes on C# threads. [5+5]

10.a) Explain the basic primitives of LISP. Give suitable examples.

b) Explain in detail ML inferencing process. [5+5]

OR

11.a) Explain about the data types and their values in python.

b) What is the importance of module library in python? [5+5]

---ooOoo---

Code No: 114DU

R13

JAWAHARLAL NEHRU TECHNOLOGICAL UNIVERSITY HYDERABAD

B.Tech II Year II Semester Examinations, May - 2017

THERMAL ENGINEERING – I

(Common to ME, AME)

Time: 3 Hours **Max. Marks: 75**

Note: This question paper contains two parts A and B.
Part A is compulsory which carries 25 marks. Answer all questions in Part A. Part B consists of 5 Units. Answer any one full question from each unit. Each question carries 10 marks and may have a, b, c as sub questions.

PART- A

(25 Marks)

1.a)	What are the different strokes in two stroke engines.	[2]
b)	List out the differences between the SI engine and CI engine.	[3]
c)	What is meant by Cetane number?	[2]
d)	Describe the three desirable properties of CI engine fuels.	[3]
e)	What is the importance for measurement of exhaust gas temperature?	[2]
f)	List out the functions of compressors.	[3]
g)	On which principle the centrifugal pump works.	[2]
h)	Explain the importance of slip factor in compressor.	[3]
i)	What is meant by tonne of refrigeration?	[2]
j)	List out the advantages of air refrigeration.	[3]

PART-B

(50 Marks)

2.a) How does the Zenith carburetor fulfill the requirements of a good carburetor.
b) Explain the working of battery ignition system with the neat sketch. [5+5]

OR

3.a) Explain the working of solid injection system with neat sketch.
b) Explain the working of splash lubricating system with neat sketch. [5+5]

4.a) Briefly explain the stages of combustion in SI engines elaborating the flame front propagation.
b) Explain the effect of various engine variables on SI engine knock. [5+5]

OR

5.a) What are the methods to be followed to avoid knocking in SI engine.
b) What are anti knock agents? Indicate the substances used and their effects on reducing of knocking. [5+5]

6. During a test on a diesel engine the following observations were made:
The power developed by the engine is used for driving a D.C. generator. The output of the generator was 210 A at 200V; the efficiency of generator being 82%.The quantity of fuel supplied to the engine was 11.2 kg/h; calorific value of fuel being 42600kJ/kg. The air-fuel ratio was 18:1. The exhaust gases were passed through a exhaust gas calorimeter for which the observations were as follows:
Water circulated through exhaust gas calorimeter = 580 liters/hr. Temperature rise of water through calorimeter=36^0C. Temperature of exhaust gases at exit from calorimeter=98^0C. Ambient temperature=20^0C.
Heat lost to jacket cooling water is 32% of the total heat supplied.
If the specific heat of exhaust gases be 1.05kJ/kg K. Draw up the heat balance sheet on minute basis. [10]

OR

7.a) Explain the air box method for the measurement of air consumption in internal combustion engine.

b) A six cylinder, 4 stroke SI engine having a piston displacement of 700cm^3 per cylinder developed 78kW at 3200r.p.m. and consumed 27 kg of petrol per hour. The calorific value of petrol is 44 MJ/kg. Estimate:
i) The volumetric efficiency of the engine if the air-fuel ratio is 12 and intake air is at 0.9 bar, 32^0C ii) The brake thermal efficiency iii) The brake torque
For air, R=0.287kJ/kg K. [5+5]

8. A centrifugal compressor running at 8000 rpm delivers 660m^3/min of free air. The air is compressed from 1.01 bar and 15^0C to a pressure of 3 with an isentropic efficiency of 80%. Blades are radial at outlet of impeller and flow velocity of 60 m/s may be assume throughout constant. The outer radius of impeller is thrice the inner and the slip factor may be assumed as 0.8.The blade area coefficient may be assumed 0.8 at inlet. Calculate:
a) Final temperature of air b) Theoretical power c) Impeller diameters at inlet and outlet d) Breadth of impeller at inlet e) Impeller blade angle at inlet f) Diffuser blade angle at inlet. [10]

OR

9.a) Explain the working of roots blower compressor with neat sketch.

b) A centrifugal compressor delivers 50 kg of air per minute at a pressure of 2 bar and 97^0 C. The intake pressure and temperature of air is 1 bar and 15^0C. If no heat is lost to the surrounding, find: i) index of compression ii) Power required, if the compression is isothermal, Take R=287/kg K. [5+5]

10.a) Explain the working of Vapour compression refrigeration system with a neat diagram.

b) A Carnot cycle machine operates between the temperature limits of 47^0C and -30^0C. Determine the COP when it operates as i) refrigerating machine ii) A heat pump iii) A heat engine. [5+5]

OR

11.a) Explain the working of vapour absorption system with neat sketch.

b) A Bell-Coleman refrigerator works between 4 bar and 1 bar pressure limits. After compression, the cooling water reduces the air temperature to 17^0C. What is the lowest temperature produced by the ideal machine?
Compare the coefficient of performance of this machine with that of the ideal Carnot cycle machine working between the same pressure limits, the temperature at the beginning of compression being -13^0 C. [5+5]

---ooOoo---

Code No: 54007 **R09**

JAWAHARLAL NEHRU TECHNOLOGICAL UNIVERSITY HYDERABAD
B.Tech II Year II Semester Examinations, May - 2017
MANAGERIAL ECONOMICS AND FINANCIAL ANALYSIS
(Common to EEE, PTM)

Time: 3 hours **Max. Marks: 75**

Answer any five questions
All questions carry equal marks

1.a) "Managerial Economics is the discipline which deals with the application of economics theory to business decisions". Discuss.
b) Explain the Law of Demand along with its assumptions and exceptions. Use necessary diagram. [8+7]

2. Explain 'Elasticity of Demand' and illustrate various types of Elasticity of Demand. What are its Managerial uses? [15]

3.a) What are the external economies that accrue to a firm due to large scale production.
b) A company producing a single article sells at Rs.20 each. The marginal cost of production is Rs.12 each and fixed cost is Rs. 8000 p.a Calculate i) the P/V Ratio and ii) Sales required to Break-Even. [8+7]

4.a) Describe the features of Perfect Competition. How is the price determined under conditions of Perfect Competition?
b) How can price be fixed is case of Market Skimming Pricing and Penetration Pricing? [7+8]

5.a) Evaluate Partnership form of business organization.
b) Critically the changing business environment, after- liberalization. [8+7]

6.a) List out and explain the different sources of raising Long-term finance.
b) Determine the Payback period for a project which requires a cash out lay of Rs.12,000 and generates cash inflows of Rs. 4,000, Rs. 4,000 and Rs. 5,000 in the first, second, third years respectively. [10+5]

7.a) How are solvency and profitability ratios classified?
b) Illustrate the calculation of Current Ratio and Quick Ratio with assumed data. [10+5]

8. From the following Trial balance, prepare Trading, P & L Account and Balance sheet.

Trial Balance

Debtors	16,300	Capital	40,000
Cash	12.500	Sales	9,000
Furniture	10,000	Purchase returns	500
Purchases	3,500	Creditor	2,500
Sales returns	300		
Opening stock	2,000		
Rent & Rates	750		
Insurance	350		
Wages	800		
Carriage	500		
Discount	650		
Oil and Fuel	550		
Drawing	2,900		
Carriage outwards	300		
Stationery	600		
TOTAL	**52,000**	**TOTAL**	**52,000**

Adjustments:
a) Closing stock was valued at: 2,600
b) Provide depreciation on furniture at 10%
c) Write off bad debts Rs. 800/- [15]

---ooOoo---

R09

Code No: 54058

JAWAHARLAL NEHRU TECHNOLOGICAL UNIVERSITY HYDERABAD
B.Tech II Year II Semester Examinations, May - 2017
OBJECT ORIENTED PROGRAMMING
(Common to CSE, IT)

Time: 3 hours **Max. Marks: 75**

Answer any five questions
All questions carry equal marks

1.a) Explain about 'for' loop in Java with an example.
b) Write a Java Program to find the sum of digits of a given number. [7+8]

2.a) Explain the concept of array in Java.
b) Write a java Program to find the inverse of a given Matrix. [7+8]

3.a) Briefly explain about Polymorphism.
b) Write a short note on super keyword. [7+8]

4.a) What is an interface? Explain with an example.
b) Write a short note on abstract class. [8+7]

5.a) Explain the concept of exception handling.
b) Write a short note on thread life cycle. [8+7]

6.a) Briefly explain the concept about adapter classes.
b) Write a short note on the following layout managers:
i) Boarder layout
ii) Card layout. [7+8]

7.a) Explain the concept of passing parameters to applets.
b) Describe the concept of Tabbed Panes in Swings with an example. [7+8]

8.a) Write a Java Program to describe the Scroll bar.
b) Write a short note on following:
i) TCP / IP
ii) URL
iii) Domain name
iv) UDP. [7+8]

---ooOoo---

R09

Code No: 54014

JAWAHARLAL NEHRU TECHNOLOGICAL UNIVERSITY HYDERABAD
B.Tech II Year II Semester Examinations, May - 2017
KINEMATICS OF MACHINERY
(Common to ME, MCT, AME)

Time: 3 hours **Max. Marks: 75**

Answer any five questions
All questions carry equal marks

1.a) Define kinematic pair? Distinguish between closed and open type kinematic pairs. Give examples for each type?
b) Explain with a neat sketch the inversion of a single slider crank chain. [7+8]

2.a) Explain Pantograph mechanism in detail.
b) Explain with neat sketches the exact and approximate Straight line motion mechanisms? [7+8]

3.a) Explain the term coriolis component of acceleration and derive a relation for coriolis component of acceleration. Mention the application of this mechanism.
b) Explain how the velocity and acceleration in the Four bar mechanism is calculated by using relative velocity method. [9+6]

4.a) Describe the working of Davis steering gear mechanism giving neat sketch. Derive the condition for correct steering of the above mechanism.
b) The Distance between the steering pivots of a Davis Steering gear is 1.3m. The wheel base is 2.75 metres. What will be the inclination of the track arms to the longitudinal axis of the vehicle if it is moving in a straight path? [7+8]

5. Design a cam for operating the exhaust valve of an oil engine. It is required to give S.H.M during opening and closing of the valve each of which corresponds to 60^0 of cam rotation. The valve must remain in fully open position for 20^0 of cam rotation. The lift of the valve is 36 mm and the least radius of the cam is 50mm. The follower is provided with a roller of 40 mm diameter and its line of stroke passes through the axis of the cam. Find the maximum velocity and acceleration of the follower during opening and closing periods for a cam shaft speed of 240 R.P.M. [15]

6.a) If the interference between two involute gears is to be avoided then prove that the maximum length of arc of contact will be equal to $(R+ r) \tan\Phi$ where R and r = Pitch circle radius of wheel and pinion, Φ = Pressure angle.
b) Two 20^0 involute spur gear having a velocity ratio of 2.5 meshes externally. Module is 4 mm and the addendum is equal to 1.23 module. Pinion rotates at 150 rpm. Find (i) the minimum number of teeth on each wheel to avoid interference (ii) the number of pairs of teeth in contact. [7+8]

7.a) Classify the belt drives?

b) Two parallel shafts, connected by a crossed-belt, are provided with pulleys 480mm and 640mm in diameters. The distance between the centre lines of the shafts is 3m. Find by how much the length of the belt should be changed if it is desired to alter the direction of rotation of the driven shaft. [6+9]

8. An epicyclic reduction gear, as shown in figure, has a shaft A fixed to arm B. The arm B has a pin fixed to its outer end and two gears C and E which are rigidly fixed, revolve on this pin. Gear C meshes with annular wheel D and gear E with pinion F, G is the driver pulley and D is kept stationary. The number of teeth are: D = 80; C=10; E=24 and F=18. If the pulley G runs at 200 r.p.m. find the speed of shaft A. [15]

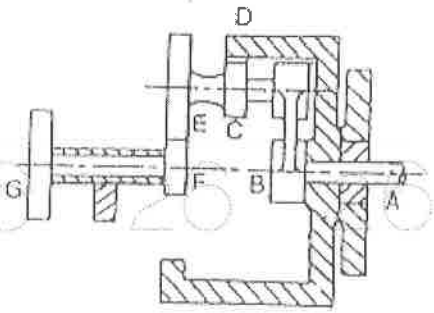

--ooOoo--

Code No: 124DC

R15

JAWAHARLAL NEHRU TECHNOLOGICAL UNIVERSITY HYDERABAD
B.Tech II Year II Semester Examinations, May - 2017
MANAGERIAL ECONOMICS AND FINANCIAL ANALYSIS
(Common to EEE, PTM)

Time: 3 Hours Max. Marks: 75

Note: This question paper contains two parts A and B.
Part A is compulsory which carries 25 marks. Answer all questions in Part A. Part B consists of 5 Units. Answer any one full question from each unit. Each question carries 10 marks and may have a, b, c as sub questions.

PART- A

(25 Marks)

1.a) With assumed data, illustrate how cross elasticity of demand can be measured? [2]
b) Under what conditions, demand curve cannot slope towards right? [3]
c) What is the significance of Cobb-Douglas Production function? [2]
d) Establish the relationship between Average cost and Marginal cost. [3]
e) What are the important points to be included in a partnership deed? [2]
f) Define 'Product differentiation' and explain how can it be made? [3]
g) What do you understand by 'Ploughing back of profits'? How is it helpful to a business unit? [2]
h) Which capital budgeting method do you choose between pay back method and Accounting Rate of Return method, in case the net annual earnings decline year after year during its life time? [3]
i) What items constitute 'Net worth'? [2]
j) What is the procedure you follow while finalizing Accounts, in case some balance of reserve for Provision for bad and doubtful debts is existing and you are required to modify the reserve by a given percentage? [3]

PART-B

(50 Marks)

2. Discuss in detail the nature and scope of Managerial economics and point out the issues that need the application of Managerial economics for decision making. [10]

OR

3. What is the purpose of Demand forecasting? Explain various methods of demand forecasting usually followed in business and also their suitability. [10]

4. What are the features of Isoquants? How can a producer find least cost combination of factor inputs through Isoquant analysis? Use necessary diagrams in support of your presentation. [10]

OR

5. Explain the following cost concepts and give suitable examples:
a) Opportunity costs b) Sunk costs c) Implicit costs
d) Incremental costs e) Replacement costs. [10]

6. Distinguish between skimming and penetrating pricing policies of a business firm? What are the reasons for firms to follow different pricing policies? [10]

OR

7. Some decades back, lot of importance was given for the promotion of public sector undertakings in India. Now the position is different. How can Government enter into business? Comment on the reasons for the change in the attitude of Government for participation in business in recent times. [10]

8. By considering assumed data, illustrate how Payback period method, Accounting rate of return method and Net present value method can be employed while selecting the effective alternative method. [10]

OR

9. What do you understand by 'Working capital cycle'? What is its significance? Explain in detail the various sources of mobilizing working capital needed by an industrial unit. [10]

10. What are financial statements? Explain how different tests of liquidity, solvency and profitability can be measured for interpretation? [10]

OR

11. From the following balances belonging to Darani, prepare Trading, Profit & loss Account for the year ending 31st March.2016 and Balance sheet as on that date:

Particulars	Dr.(Rs.)	Cr. (Rs.)
Opening stock	50,000	
Purchases	6,50,000	
wages	70,000	
Machinery	16,00,000	
Furniture	1,10,000	
Salaries	52,000	
cash	35,000	
Goodwill	1,00,000	
capital		10,00,000
Creditors		40,000
Sales		12,00,000
Interest received		16,000
Loan on Machinery		4,00,000
Bills payable		11,000
	26,67,000	**26,67,000**

Adjustments:

a) Closing stock was valued at Rs.75, 000

b) Wages and salaries are outstanding by Rs.10, 000 and Rs.5, 000 respectively

c) Depreciate Machinery @ 5%

d) Interest receivable outstanding Rs.5, 000. [10]

---ooOoo---

Code No: 124CK

R15

JAWAHARLAL NEHRU TECHNOLOGICAL UNIVERSITY HYDERABAD
B.Tech II Year II Semester Examinations, May - 2017
BUILDING MATERIALS, CONSTRUCTION AND PLANNING
(Common to CE, CEE)

Time: 3 Hours **Max. Marks: 75**

Note: This question paper contains two parts A and B.
Part A is compulsory which carries 25 marks. Answer all questions in Part A.
Part B consists of 5 Units. Answer any one full question from each unit.
Each question carries 10 marks and may have a, b, c as sub questions.

PART- A

(25 Marks)

1.a)	Define the term dressing of stones.	[2]
b)	Write the properties of good brick.	[3]
c)	Define the term Admixture and state any two examples of admixtures.	[2]
d)	Define the term hydration and what is the use of hydration?	[3]
e)	Explain the Requirements of ventilation in residential building.	[2]
f)	Write types of staircase and draw only two staircase plan's.	[3]
g)	Define pointing.	[2]
h)	Explain briefly about header and stretcher.	[3]
i)	Write about floor area ratio.	[2]
j)	Define Residential building.	[3]

PART- B

(50 Marks)

2. Explain the chemical composition of brick and explain the preparation of bricks. [10]

OR

3. Define the term wood and explain the reinforced glass fibre bricks. [10]

4. Explain the manufacturing of cement with neat sketch. [10]

OR

5. Explain the chemical admixtures and its uses. [10]

6. Draw the plan and elevation and section of a Glazed and half panelled door. [10]

OR

7.a) Draw the plan and elevation of fully panel window.
b) Explain briefly classification of fire resistant materials. [5+5]

8.a) Explain types of scaffolding with a neat sketch.
b) Write about rubble masonry. [5+5]

OR

9. Explain about English band and draw the plan and elevation of one and half brick wall showing Flemish bond. [10]

10. Explain the classification of buildings with material specifications. [10]

OR

11. Explain the Building Bye-laws. [10]

---ooOoo---

Code No: 124CR **R15**

JAWAHARLAL NEHRU TECHNOLOGICAL UNIVERSITY HYDERABAD
B.Tech II Year II Semester Examinations, May - 2017
DATA COMMUNICATION
(Information Technology)

Time: 3 Hours **Max. Marks: 75**

Note: This question paper contains two parts A and B.
Part A is compulsory which carries 25 marks. Answer all questions in Part A.
Part B consists of 5 Units. Answer any one full question from each unit.
Each question carries 10 marks and may have a, b, c as sub questions.

PART- A

(25 Marks)

1.a) What is layered network architecture? [2]
b) Explain serial and parallel data transmission. [3]
c) Compare TDM and FDM techniques. [2]
d) What is Satellite? Compare Synchronous and Asynchronous satellites. [3]
e) What is Signaling in telephone? Mention types of Signaling. [2]
f) What are the advantages of Private line data networks over switched public telephone networks? [3]
g) Give the specifications of IS-95. [2]
h) Explain Bar codes and their types. [3]
i) What is bits per second and baud? [2]
j) What is Modem training? Explain. [3]

PART-B

(50 Marks)

2.a) What is protocol? Explain different types of Data Communication protocols.
b) What is Network topology? Explain different types of network topologies. [6+4]

OR

3. Discuss in detail Analog Modulation systems and digital Modulation. [10]

4.a) What is Digital modulation techniques? Explain PSK and QPSK modulation techniques with neat constellation diagrams.
b) Determine the minimum Bandwidth, baud rate and bandwidth efficiency for the bit rate fb = 9600bps for the modulation schemes i) BPSK ii) QAM. [6+4]

OR

5.a) What is Clarkie orbit? List the advantages and disadvantages of geosynchronous satellites.
b) Explain the following terms for optical fibres:
i) Critical angle ii) Numerical aperture iii) Acceptance angle iv) Snell's law. [6+4]

6.a) What is Standard telephone set? Explain its basic functions.
b) What is single frequency Interference? Explain about types of single frequency Interference. [6+4]

OR

7.a) What is Cross talk? Explain different types of Cross talk.
b) Explain (i) Dial pulses (ii) Receiver ON / OFF Hook. [6+4]

8.a) Explain CDMA, its channel allocation and its traffic channels.

b) For a 12 bit data string of 110011101101, determine the number of Hamming bits required, arbitrarily place the Hamming bits into the data string, determine the logic condition of each Hamming bit, assume an arbitrary single bit transmission error, and prove that the Hamming code will successfully detect the error. [5+5]

OR

9.a) Explain character synchronization in detail.

b) Explain Digital cellular telephone system. [7+3]

10.a) Explain Synchronous Voice band Modems.

b) Explain Modem Equalizers. Describe its uses. [6+4]

OR

11.a) Explain Modem:
i) Transmission modes
ii) Operational modes
iii) Command types.

b) Explain Cable Modems. [6+4]

---ooOoo---

Code No: 124CN

R15

JAWAHARLAL NEHRU TECHNOLOGICAL UNIVERSITY HYDERABAD
B.Tech II Year II Semester Examinations, May - 2017
COMPUTER ORGANIZATION
(Computer Science and Engineering)

Time: 3 Hours **Max. Marks: 75**

Note: This question paper contains two parts A and B.
Part A is compulsory which carries 25 marks. Answer all questions in Part A.
Part B consists of 5 Units. Answer any one full question from each unit.
Each question carries 10 marks and may have a, b, c as sub questions.

PART-A

(25 Marks)

1.a) Define the effective address. [2]
b) Explain about Logical and Bit Manipulation Instructions. [3]
c) Explain about the purpose of Input-output interface. [2]
d) Explain about the two-wire control. [3]
e) Explain about auxiliary memory. [2]
f) What is a bootstrap loader? Explain about the functions of bootstrap loader. [3]
g) Explain about the purpose of Bus High Enable pin in 8086. [2]
h) Explain about condition code flag register in 8086. [3]
i) Explain about One-byte instruction in 8086. [2]
j) Explain about FAR PTR and NEAR PTR assembler directive. [3]

PART-B

(50 Marks)

2. Write a program to evaluate the arithmetic statement:

$$\frac{X-A-B+C*(D*E-F)}{G+H*K}$$

a) Using a general register computer with three address instructions.
b) Using a general register computer with two address instructions. [5+5]

OR

3.a) Explain about the functions of CPU.
b) Explain about Program Control Instructions. [5+5]

4.a) Explain about Source-initiated transfer using handshaking and Destination-initiated transfer using handshaking with a neat diagram.
b) A CPU with a 20-MHz clock is connected to a memory unit whose access time is 40 ns. Formulate a read and write timing diagrams using a READ strobe and a WRITE strobe. Include the address in the timing diagram. [5+5]

OR

5.a) What is the difference between isolated I/O and memory-mapped I/O? What are the advantages and disadvantages of each?
b) Explain about Intel 8089 IOP. [5+5]

6. A computer uses RAM chips of 1024 × 1 capacity.
a) How many chips are needed, and how should their address lines be connected to provide a memory capacity of 1024 bytes?
b) How many chips are needed to provide a memory capacity of 16K bytes? Explain in words how the chips are to be connected to the address bus. [5+5]

OR

7.a) Obtain the Boolean function for the match logic of one word in an associative memory taking into consideration a tag bit that indicates whether the word is active or inactive.
b) Explain about Virtual Memory with the implementation details. [5+5]

8.a) Explain about the register organization of 8086.
b) Explain about the concept of segmented memory with a neat diagram. Explain its advantages. [5+5]

OR

9.a) Explain about addressing modes of 8086.
b) Explain about the functions of opcode prefetch queue in an 8086 system. [5+5]

10.a) Explain about different instruction formats in 8086.
b) Write an Assembly Language program to perform one byte BCD addition. [5+5]

OR

11.a) Explain about different types of Assembler directives and operators.
b) Write an ALP program to find transpose of a 3×3 matrix. [5+5]

---ooOoo---

Code No: 124CZ

R15

JAWAHARLAL NEHRU TECHNOLOGICAL UNIVERSITY HYDERABAD
B.Tech II Year II Semester Examinations, May - 2017
KINEMATICS OF MACHINES
(Common to ME, MCT, MSNT)

Time: 3 Hours **Max. Marks: 75**

Note: This question paper contains two parts A and B.
Part A is compulsory which carries 25 marks. Answer all questions in Part A.
Part B consists of 5 Units. Answer any one full question from each unit.
Each question carries 10 marks and may have a, b, c as sub questions.
Illustrate your answers with NEAT sketches wherever necessary

PART - A

(25 Marks)

1.a) What is the difference between Mechanism, Machine, and Structure. [2]
b) Explain the difference between Rigid Link, Flexible and Fluid link, with an example for each. [3]
c) Define 'Instantaneous center of rotation' and state the Three-Centers-In-Line theorem. [2]
d) Draw a rough sketch of Klein's construction for the velocity diagram of a Single slider crank mechanism and explain how you get the velocity of the slider. [3]
e) What is the difference between the Scott–Russel and modified Scott - Russel mechanisms? Explain with sketches. [2]
f) What is the main advantage of Double Hooke's joint over the Single Hooke's joint? [3]
g) Name the different types of cams and followers. [2]
h) What is the difference between the follower motion of uniform and equal acceleration and retardation and uniform and unequal acceleration and retardation. Explain with sketches of the relevant displacement diagrams. [3]
i) What is the difference between compound gear train and reverted gear train? Explain with relevant sketches. [2]
j) What is Interference in gears? When does it occur? [3]

PART – B **(50 Marks)**

2.a) Explain, with a sketch, the drag-link mechanism.
b) Draw the sketch of 'Ellipse Trammels', and prove how it can be used to draw an ellipse. [5+5]

OR

3.a) What is Kutzback's criterion for degrees of freedom of plane mechanisms? In what way the Gruebler's criterion different from it?
b) Draw the sketch of Whitworth quick return motion mechanism, and explain its working. [5+5]

4. The crank and connecting rod of a reciprocating engine are 30 cm and 150 cm long respectively. The crank rotates at 180 rpm clockwise. Determine the velocity and acceleration of the piston when the crank is at 40^0 from the IDC, Also determine the position of the crank for zero acceleration of the piston. [10]

OR

5. In the mechanism shown in figure 1, the driving crank OC rotates *ccw* about the fixed point O at a uniform speed of 150 rpm. The lever BD is pivoted about the pin D which is fixed and oscillates about D, A coupler BC connects the points B and C, The die block F, driven by the link EF moves in the horizontal guides. When the crank angle is 45^0, find the velocity of F, using the ***Instantaneous center method***. OC=DE=15 mm, CB=BD =45 mm, EF = 25 mm. [10]

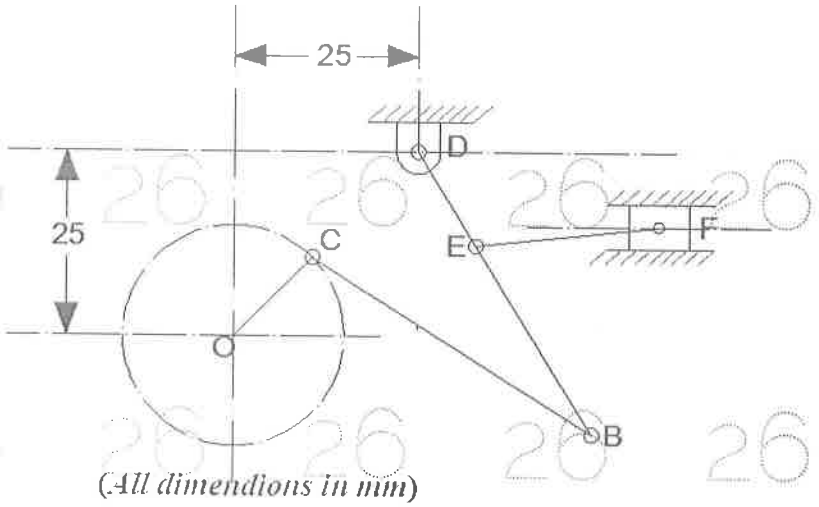

(All dimendions in mm)

Figure: 1

6. In a Grass-Hopper mechanism shown in figure 2, the link lengths are:
OQ = 100 mm, SP = 375 mm, QS = 150 mm, and SR = 225 mm.
Find the magnitude of the vertical force necessary at P to resist a torque of 120 N-m applied to the link OQ when it makes an angle of 15^0 with the horizontal. [10]

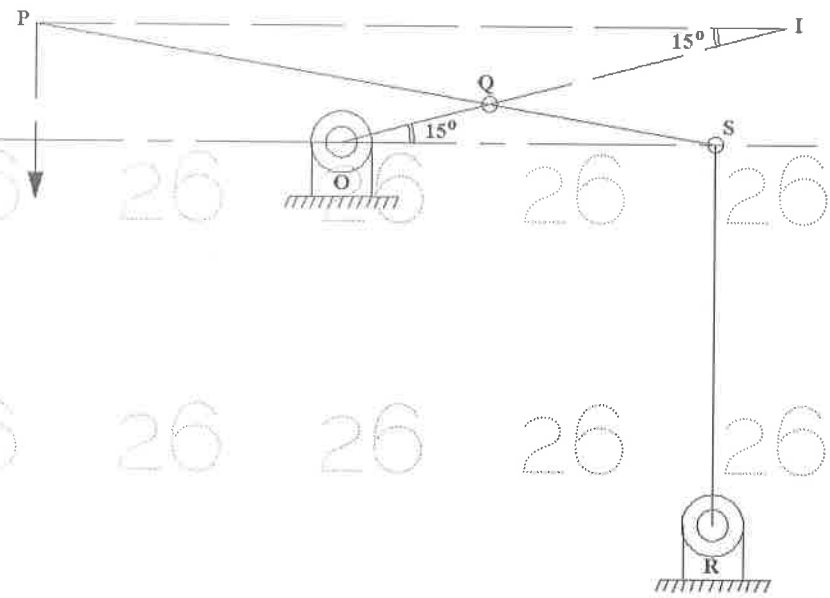

Figure: 2

OR

7.a) Sketch the Hart mechanism, and prove that it produces an exact straight line motion.

b) In a Hooke's joint, the angle between the axes of driving and driven shafts is 15^0. Find the angle turned by the driving shaft when the velocity of the driven shaft is maximum, minimum, and is equal to that of the driving shaft. [5+5]

8. Draw the profile of a cam to give the motion as given below to a roller follower:
a) Outward stroke of the follower during 90^0 of cam rotation,
b) Dwell for 30^0 of cam rotation,
c) Return stroke of the follower during 100^0 of cam rotation,
d) Dwell for the remaining period of cam rotation.
Lift of the follower is 25 mm ; Diameter of roller is 20 mm ; Minimum radius of the cam is 30 mm ; Line of stroke of the follower coincides with the axis of cam. The outward stroke takes place with uniform velocity, and the return stroke with uniform and equal acceleration and retardation. [10]

OR

9. The follower of a tangent cam is operated through a roller of 24 mm diameter, and its line of stroke passes through the axis of the cam. The minimum radius of the cam is 40 mm, nose radius is 12mm, and the lift is 25 mm. If the speed of rotation of the cam is 900 rpm, find the velocity of the follower at the instant when the cam is 20^0 from the full lift position. [10]

10.a) State and prove the law of gearing.

b) In a sun and planet gear train, the sun gear having 60 teeth is fixed to the frame. Find the number of teeth on the planet wheels and the annular wheel, if the annulus rotates 130 times in the same time when the arm rotates 100 times, both in the same direction. [5+5]

OR

11.a) A rack is being driven by an 18-teeth pinion of involute profile and 120 mm pitch circle diameter. The addendum of both pinion and rack is 6 mm. Find the least pressure angle required to avoid interference.

b) Prove that the velocity of sliding is proportional to the distance of the point of contact from the pitch point. [5+5]

---ooOoo---

Code No: 114CR **R13**

JAWAHARLAL NEHRU TECHNOLOGICAL UNIVERSITY HYDERABAD
B.Tech II Year II Semester Examinations, May - 2017
DATA COMMUNICATION
(Information Technology)

Time: 3 Hours **Max. Marks: 75**

Note: This question paper contains two parts A and B.
Part A is compulsory which carries 25 marks. Answer all questions in Part A.
Part B consists of 5 Units. Answer any one full question from each unit.
Each question carries 10 marks and may have a, b, c as sub questions.

PART- A

(25 Marks)

1.a) What is layered network architecture? [2]
b) Explain serial and parallel data transmission. [3]
c) Compare TDM and FDM techniques. [2]
d) What is Satellite? Compare Synchronous and Asynchronous satellites. [3]
e) What is Signaling in telephone? Mention types of Signaling. [2]
f) What are the advantages of Private line data networks over switched public telephone networks? [3]
g) Give the specifications of IS-95. [2]
h) Explain Bar codes and their types. [3]
i) What is bits per second and baud? [2]
j) What is Modem training? Explain. [3]

PART-B

(50 Marks)

2.a) What is protocol? Explain different types of Data Communication protocols.
b) What is Network topology? Explain different types of network topologies. [6+4]

OR

3. Discuss in detail Analog Modulation systems and digital Modulation. [10]

4.a) What is Digital modulation techniques? Explain PSK and QPSK modulation techniques with neat constellation diagrams.
b) Determine the minimum Bandwidth, baud rate and bandwidth efficiency for the bit rate fb = 9600bps for the modulation schemes i) BPSK ii) QAM. [6+4]

OR

5.a) What is Clarkie orbit? List the advantages and disadvantages of geosynchronous satellites.
b) Explain the following terms for optical fibres:
i) Critical angle ii) Numerical aperture iii) Acceptance angle iv) Snell's law. [6+4]

6.a) What is Standard telephone set? Explain its basic functions.
b) What is single frequency Interference? Explain about types of single frequency Interference. [6+4]

OR

7.a) What is Cross talk? Explain different types of Cross talk.
b) Explain (i) Dial pulses (ii) Receiver ON / OFF Hook. [6+4]

8.a) Explain CDMA, its channel allocation and its traffic channels.

b) For a 12 bit data string of 110011101101, determine the number of Hamming bits required, arbitrarily place the Hamming bits into the data string, determine the logic condition of each Hamming bit, assume an arbitrary single bit transmission error, and prove that the Hamming code will successfully detect the error. [5+5]

OR

9.a) Explain character synchronization in detail.

b) Explain Digital cellular telephone system. [7+3]

10.a) Explain Synchronous Voice band Modems.

b) Explain Modem Equalizers. Describe its uses. [6+4]

OR

11.a) Explain Modem:
i) Transmission modes
ii) Operational modes
iii) Command types.

b) Explain Cable Modems. [6+4]

---ooOoo---

Code No: 114DC

R13

JAWAHARLAL NEHRU TECHNOLOGICAL UNIVERSITY HYDERABAD
B.Tech II Year II Semester Examinations, May - 2017
MANAGERIAL ECONOMICS AND FINANCIAL ANALYSIS
(Common to EEE, PTM)

Time: 3 Hours **Max. Marks: 75**

Note: This question paper contains two parts A and B.
Part A is compulsory which carries 25 marks. Answer all questions in Part A. Part B consists of 5 Units. Answer any one full question from each unit. Each question carries 10 marks and may have a, b, c as sub questions.

PART- A

(25 Marks)

1.a) With assumed data, illustrate how cross elasticity of demand can be measured? [2]
b) Under what conditions, demand curve cannot slope towards right? [3]
c) What is the significance of Cobb-Douglas Production function? [2]
d) Establish the relationship between Average cost and Marginal cost. [3]
e) What are the important points to be included in a partnership deed? [2]
f) Define 'Product differentiation' and explain how can it be made? [3]
g) What do you understand by 'Ploughing back of profits'? How is it helpful to a business unit? [2]
h) Which capital budgeting method do you choose between pay back method and Accounting Rate of Return method, in case the net annual earnings decline year after year during its life time? [3]
i) What items constitute 'Net worth'? [2]
j) What is the procedure you follow while finalizing Accounts, in case some balance of reserve for Provision for bad and doubtful debts is existing and you are required to modify the reserve by a given percentage? [3]

PART-B

(50 Marks)

2. Discuss in detail the nature and scope of Managerial economics and point out the issues that need the application of Managerial economics for decision making. [10]

OR

3. What is the purpose of Demand forecasting? Explain various methods of demand forecasting usually followed in business and also their suitability. [10]

4. What are the features of Isoquants? How can a producer find least cost combination of factor inputs through Isoquant analysis? Use necessary diagrams in support of your presentation. [10]

OR

5. Explain the following cost concepts and give suitable examples:
a) Opportunity costs b) Sunk costs c) Implicit costs
d) Incremental costs e) Replacement costs. [10]

6. Distinguish between skimming and penetrating pricing policies of a business firm? What are the reasons for firms to follow different pricing policies? [10]

OR

7. Some decades back, lot of importance was given for the promotion of public sector undertakings in India. Now the position is different. How can Government enter into business? Comment on the reasons for the change in the attitude of Government for participation in business in recent times. [10]

8. By considering assumed data, illustrate how Payback period method, Accounting rate of return method and Net present value method can be employed while selecting the effective alternative method. [10]

OR

9. What do you understand by 'Working capital cycle'? What is its significance? Explain in detail the various sources of mobilizing working capital needed by an industrial unit. [10]

10. What are financial statements? Explain how different tests of liquidity, solvency and profitability can be measured for interpretation? [10]

OR

11. From the following balances belonging to Darani, prepare Trading, Profit & loss Account for the year ending 31st March.2016 and Balance sheet as on that date:

Particulars	Dr.(Rs.)	Cr. (Rs.)
Opening stock	50,000	
Purchases	6,50,000	
wages	70,000	
Machinery	16,00,000	
Furniture	1,10,000	
Salaries	52,000	
cash	35,000	
Goodwill	1,00,000	
capital		10,00,000
Creditors		40,000
Sales		12,00,000
Interest received		16,000
Loan on Machinery		4,00,000
Bills payable		11,000
	26,67,000	**26,67,000**

Adjustments:

a) Closing stock was valued at Rs.75, 000

b) Wages and salaries are outstanding by Rs.10, 000 and Rs.5, 000 respectively

c) Depreciate Machinery @ 5%

d) Interest receivable outstanding Rs.5, 000. [10]

---ooOoo---

Code No: 114CK

R13

JAWAHARLAL NEHRU TECHNOLOGICAL UNIVERSITY HYDERABAD
B.Tech II Year II Semester Examinations, May - 2017
BUILDING MATERIALS, CONSTRUCTION AND PLANNING
(Common to CE, CEE)

Time: 3 Hours **Max. Marks: 75**

Note: This question paper contains two parts A and B.
Part A is compulsory which carries 25 marks. Answer all questions in Part A.
Part B consists of 5 Units. Answer any one full question from each unit.
Each question carries 10 marks and may have a, b, c as sub questions.

PART- A

(25 Marks)

1.a)	Define the term dressing of stones.	[2]
b)	Write the properties of good brick.	[3]
c)	Define the term Admixture and state any two examples of admixtures.	[2]
d)	Define the term hydration and what is the use of hydration?	[3]
e)	Explain the Requirements of ventilation in residential building.	[2]
f)	Write types of staircase and draw only two staircase plans.	[3]
g)	Define pointing.	[2]
h)	Explain briefly about header and stretcher.	[3]
i)	Write about floor area ratio.	[2]
j)	Define Residential building.	[3]

PART- B

(50 Marks)

2. Explain the chemical composition of brick and explain the preparation of bricks. [10]

OR

3. Define the term wood and explain the reinforced glass fibre bricks. [10]

4. Explain the manufacturing of cement with neat sketch. [10]

OR

5. Explain the chemical admixtures and its uses. [10]

6. Draw the plan and elevation and section of a Glazed and half panelled door. [10]

OR

7.a) Draw the plan and elevation of fully panel window.
b) Explain briefly classification of fire resistant materials. [5+5]

8.a) Explain types of scaffolding with a neat sketch.
b) Write about rubble masonry. [5+5]

OR

9. Explain about English band and draw the plan and elevation of one and half brick wall showing Flemish bond. [10]

10. Explain the classification of buildings with material specifications. [10]

OR

11. Explain the Building Bye-laws. [10]

---ooOoo---

Code No: 114CN

R13

JAWAHARLAL NEHRU TECHNOLOGICAL UNIVERSITY HYDERABAD
B.Tech II Year II Semester Examinations, May - 2017
COMPUTER ORGANIZATION
(Computer Science and Engineering)

Time: 3 Hours **Max. Marks: 75**

Note: This question paper contains two parts A and B.
Part A is compulsory which carries 25 marks. Answer all questions in Part A.
Part B consists of 5 Units. Answer any one full question from each unit.
Each question carries 10 marks and may have a, b, c as sub questions.

PART- A

(25 Marks)

1.a) Define the effective address. [2]
b) Explain about Logical and Bit Manipulation Instructions. [3]
c) Explain about the purpose of Input-output interface. [2]
d) Explain about the two-wire control. [3]
e) Explain about auxiliary memory. [2]
f) What is a bootstrap loader? Explain about the functions of bootstrap loader. [3]
g) Explain about the purpose of Bus High Enable pin in 8086. [2]
h) Explain about condition code flag register in 8086. [3]
i) Explain about One-byte instruction in 8086. [2]
j) Explain about FAR PTR and NEAR PTR assembler directive. [3]

PART-B

(50 Marks)

2. Write a program to evaluate the arithmetic statement:

$$\frac{X-A-B+C*(D*E-F)}{G+H*K}$$

a) Using a general register computer with three address instructions.
b) Using a general register computer with two address instructions. [5+5]

OR

3.a) Explain about the functions of CPU.
b) Explain about Program Control Instructions. [5+5]

4.a) Explain about Source-initiated transfer using handshaking and Destination-initiated transfer using handshaking with a neat diagram.
b) A CPU with a 20-MHz clock is connected to a memory unit whose access time is 40 ns. Formulate a read and write timing diagrams using a READ strobe and a WRITE strobe. Include the address in the timing diagram. [5+5]

OR

5.a) What is the difference between isolated I/O and memory-mapped I/O? What are the advantages and disadvantages of each?
b) Explain about Intel 8089 IOP. [5+5]

6. A computer uses RAM chips of 1024 × 1 capacity.
a) How many chips are needed, and how should their address lines be connected to provide a memory capacity of 1024 bytes?
b) How many chips are needed to provide a memory capacity of 16K bytes? Explain in words how the chips are to be connected to the address bus. [5+5]

OR

7.a) Obtain the Boolean function for the match logic of one word in an associative memory taking into consideration a tag bit that indicates whether the word is active or inactive.
b) Explain about Virtual Memory with the implementation details. [5+5]

8.a) Explain about the register organization of 8086.
b) Explain about the concept of segmented memory with a neat diagram. Explain its advantages. [5+5]

OR

9.a) Explain about addressing modes of 8086.
b) Explain about the functions of opcode prefetch queue in an 8086 system. [5+5]

10.a) Explain about different instruction formats in 8086.
b) Write an Assembly Language program to perform one byte BCD addition. [5+5]

OR

11.a) Explain about different types of Assembler directives and operators.
b) Write an ALP program to find transpose of a 3×3 matrix. [5+5]

---ooOoo---

Code No: 114CZ

R13

JAWAHARLAL NEHRU TECHNOLOGICAL UNIVERSITY HYDERABAD
B.Tech II Year II Semester Examinations, May - 2017
KINEMATICS OF MACHINES
(Common to ME, MCT, MSNT)

Time: 3 Hours **Max. Marks: 75**

Note: This question paper contains two parts A and B.
Part A is compulsory which carries 25 marks. Answer all questions in Part A.
Part B consists of 5 Units. Answer any one full question from each unit.
Each question carries 10 marks and may have a, b, c as sub questions.
Illustrate your answers with NEAT sketches wherever necessary

PART - A

(25 Marks)

1.a) What is the difference between Mechanism, Machine, and Structure. [2]
b) Explain the difference between Rigid Link, Flexible and Fluid link, with an example for each. [3]
c) Define 'Instantaneous center of rotation' and state the Three-Centers-In-Line theorem. [2]
d) Draw a rough sketch of Klein's construction for the velocity diagram of a Single slider crank mechanism and explain how you get the velocity of the slider. [3]
e) What is the difference between the Scott–Russel and modified Scott - Russel mechanisms? Explain with sketches. [2]
f) What is the main advantage of Double Hooke's joint over the Single Hooke's joint? [3]
g) Name the different types of cams and followers. [2]
h) What is the difference between the follower motion of uniform and equal acceleration and retardation and uniform and unequal acceleration and retardation. Explain with sketches of the relevant displacement diagrams. [3]
i) What is the difference between compound gear train and reverted gear train? Explain with relevant sketches. [2]
j) What is Interference in gears? When does it occur? [3]

PART – B **(50 Marks)**

2.a) Explain, with a sketch, the drag-link mechanism.
b) Draw the sketch of 'Ellipse Trammels', and prove how it can be used to draw an ellipse. [5+5]

OR

3.a) What is Kutzback's criterion for degrees of freedom of plane mechanisms? In what way the Gruebler's criterion different from it?
b) Draw the sketch of Whitworth quick return motion mechanism, and explain its working. [5+5]

4. The crank and connecting rod of a reciprocating engine are 30 cm and 150 cm long respectively. The crank rotates at 180 rpm clockwise. Determine the velocity and acceleration of the piston when the crank is at 40^0 from the IDC, Also determine the position of the crank for zero acceleration of the piston. [10]

OR

5. In the mechanism shown in figure 1, the driving crank OC rotates *ccw* about the fixed point O at a uniform speed of 150 rpm. The lever BD is pivoted about the pin D which is fixed and oscillates about D, A coupler BC connects the points B and C, The die block F, driven by the link EF moves in the horizontal guides. When the crank angle is 45^0, find the velocity of F, using the ***Instantaneous center method***. OC=DE=15 mm, CB=BD =45 mm, EF = 25 mm. [10]

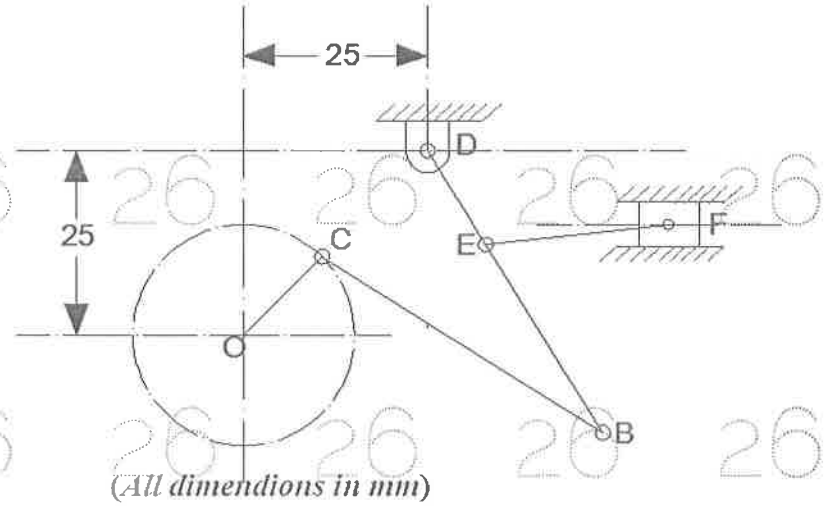

(*All dimendions in mm*)

Figure: 1

6. In a Grass-Hopper mechanism shown in figure 2, the link lengths are:
OQ = 100 mm, SP = 375 mm, QS = 150 mm, and SR = 225 mm.
Find the magnitude of the vertical force necessary at P to resist a torque of 120 N-m applied to the link OQ when it makes an angle of 15^0 with the horizontal. [10]

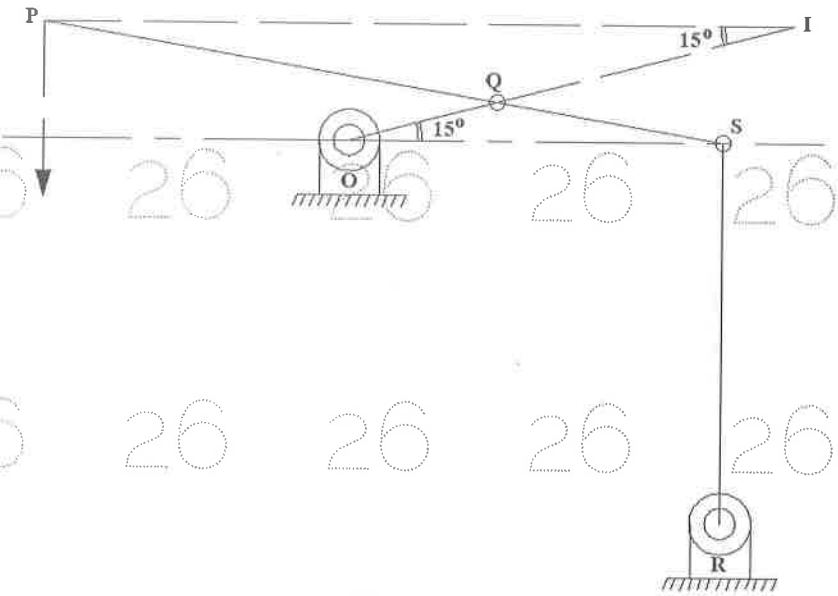

Figure: 2

OR

7.a) Sketch the Hart mechanism, and prove that it produces an exact straight line motion.

b) In a Hooke's joint, the angle between the axes of driving and driven shafts is 15^0. Find the angle turned by the driving shaft when the velocity of the driven shaft is maximum, minimum, and is equal to that of the driving shaft. [5+5]

8. Draw the profile of a cam to give the motion as given below to a roller follower:
a) Outward stroke of the follower during 90^0 of cam rotation,
b) Dwell for 30^0 of cam rotation,
c) Return stroke of the follower during 100^0 of cam rotation,
d) Dwell for the remaining period of cam rotation.
Lift of the follower is 25 mm ; Diameter of roller is 20 mm ; Minimum radius of the cam is 30 mm ; Line of stroke of the follower coincides with the axis of cam. The outward stroke takes place with uniform velocity, and the return stroke with uniform and equal acceleration and retardation. [10]

OR

9. The follower of a tangent cam is operated through a roller of 24 mm diameter, and its line of stroke passes through the axis of the cam. The minimum radius of the cam is 40 mm, nose radius is 12mm, and the lift is 25 mm. If the speed of rotation of the cam is 900 rpm, find the velocity of the follower at the instant when the cam is 20^0 from the full lift position. [10]

10.a) State and prove the law of gearing.

b) In a sun and planet gear train, the sun gear having 60 teeth is fixed to the frame. Find the number of teeth on the planet wheels and the annular wheel, if the annulus rotates 130 times in the same time when the arm rotates 100 times, both in the same direction. [5+5]

OR

11.a) A rack is being driven by an 18-teeth pinion of involute profile and 120 mm pitch circle diameter. The addendum of both pinion and rack is 6 mm. Find the least pressure angle required to avoid interference.

b) Prove that the velocity of sliding is proportional to the distance of the point of contact from the pitch point. [5+5]

---ooOoo---

Code No: 54010 **R09**

JAWAHARLAL NEHRU TECHNOLOGICAL UNIVERSITY HYDERABAD
B.Tech II Year II Semester Examinations, May - 2017
SWITCHING THEORY AND LOGIC DESIGN
(Common to EEE, ECE, BME)

Time: 3 hours **Max. Marks: 75**

Answer any five questions
All questions carry equal marks

1.a) Convert each of the following decimal numbers to excess-3 code
i) $(18)_{10}$ ii) $(56)_{10}$
b) Write a short note on hamming codes with example. [6+9]

2.a) Write the Dual of:
i) (A+BC'+AB)
ii) (AB+B'C+CD).
b) List down the Design procedure of combinational logic circuits. [8+7]

3.a) Simplify the function using K - map method
$F(A,B,C,D) = \sum(4,5,7,12,14,15) + \sum d(3,8,10)$.
b) Explain the Essential Prime implicants with example. [8+7]

4.a) What is decoder? Construct 3×8 decoder using logic gates and truth table.
b) Design a 4 bit Parallel adder using full adders. [8+7]

5.a) Generate a PLA program table to design a BCD to excess-3 code converter.
b) Discuss the Threshold logic. Explain the capabilities and limitations of Threshold gate. [8+7]

6.a) Give the design of 4 bit Ring counter and explain its operation with waveforms. Also give the applications of ring counter.
b) Design a modulo-9 counter using T flip flops with preset and clear inputs. [8+7]

7.a) State and explain with examples the state equivalence and distinguishable theorems.
b) What are the capabilities and limitations of Finite state machine? Discuss. [7+8]

8.a) Write short notes on ASM chart. Give the different boxes used in the ASM chart. Explain them with examples.
b) Show the exit paths in an ASM block for all binary combinations of control variables x, y and z, starting from an initial state. [7+8]

---ooOoo---

Code No: 54018

R09

JAWAHARLAL NEHRU TECHNOLOGICAL UNIVERSITY HYDERABAD
B.Tech II Year II Semester Examinations, May - 2017
NUMERICAL METHODS
(Common to ME, MCT, MIE)

Time: 3 hours **Max. Marks: 75**

Answer any five questions
All questions carry equal marks

1.a) Define the order of convergence and prove that the order of convergence of Newton's Raphson method is quadratic.

b) Use the method of iteration to find a root, near to 2 of the equation $x^3 = x^2 + x - 1$, carry out five iterations. [7+8]

2. Solve the following system by Jacobi's method

$$4x + y + 3z = 17$$
$$x + 5y + z = 14$$
$$2x - y + 8z = 12$$

[15]

3.a) Find the missing value from the following data

x	0	5	10	15	20	25
y	6	10	-	17	-	31

b) Find an interpolate polynomial from the following data [7+8]

x	0	1	2	4
f(x)	1	1	2	5

4.a) Derive the normal equations for best fit of the straight line $y = a + bx$

b) Find the best fit of the curve $y = a(b^x)$ to the following data [7+8]

x	2	6	5	8
y	1	5	7	9

5.a) Find the first and second order derivatives from the following data at x=1 and 5

x	1	2	3	4	5
y	0.2	0.9	1	7.2	8.3

b) A rocket is launched from the ground. Its acceleration measured every 5 seconds in table below. Find the velocity and the position of the rocket at $t = 40$ seconds, using Simpsons rule. [7+8]

t	0	5	10	15	20	25	30	35	40
a(t)	40.0	45.25	48.50	51.25	54.35	59.48	61.5	64.3	68.7

6. Solve numerically $\frac{dy}{dx} = x - y$, $y(0) = 1$ for $x =$ 0.2, 0.4 and 0.6 by modified Euler's method, by taking h = 0.2. [15]

7. Solve the boundary value problem $u'' = u + x$, $u(0) = 0$, $u(1) = 0$ with $h = \frac{1}{4}$, using finite difference approximation method. [15]

8. Solve by relaxation method, the Laplace equations $u_{xx} + u_{yy} = 0$ inside the square bounded by the lines $x = 0$, $x = 4$, $y = 0$, $y = 4$, given that $u = x^2 y^2$ on the boundary. [15]

---ooOoo---

Code No: V0222 **R07**

JAWAHARLAL NEHRU TECHNOLOGICAL UNIVERSITY HYDERABAD
B.Tech II Year II Semester Examinations, May - 2017
LINEAR AND DIGITAL IC APPLICATIONS
(Electrical and Electronics Engineering)

Time: 3 hours **Max. Marks: 80**

Answer any five questions
All questions carry equal marks

1.a) Compare the ideal and practical characteristics of an op-amp.
b) List and explain AC and DC characteristics of 741 Op-Amp. [8+8]

2.a) Prove that Op-Amp can be used as Integrator.
b) Draw the internal architecture of IC 723 voltage regulator and explain. [6+10]

3.a) Design a 1st order HPF using Op-Amp.
b) Generate a Triangular wave using an Op-Amp. [8+8]

4.a) How is an Astable multivibrator using 555 timer connected into a pulse position modulator?
b) Draw the block diagram of PLL and explain the function of each block. [8+8]

5.a) Draw and explain SAR ADC.
b) Design a R-2R Ladder DAC using an Op-Amp. [8+8]

6.a) With a neat circuit diagram and functional table explain the operation of TTL NAND gate.
b) What is mean by IC Interfacing? Explain how CMOS is going to drive TTL? [8+8]

7.a) Design a 4-bit parallel adder using the full adder.
b) Explain the floating point encoder. [8+8]

8.a) Differentiate between ripple counter and synchronous counter. Design a 4-bit counter in both modes and estimate the propagation delay.
b) Draw the architecture of RAM and explain each block of it. [8+8]

---ooOoo---